Print Engine

PEX-2000 Series

Thermal Transfer ▪ Direct Thermal

Series Models

PEX-2240L / PEX-2260L
PEX-2240R / PEX-2260R
PEX-2340L / PEX-2360L
PEX-2340R / PEX-2360R
PEX-2640L / PEX-2640R

User Manual

www.tscprinters.com

Trademark and Copyright Notice

©2025 TSC Auto ID Technology Co., Ltd.

All trademarks mentioned in this document are the property of their respective owners. TSC is a trademark of TSC Auto ID Technology Co., Ltd., registered in many jurisdictions worldwide. Unauthorized reproduction or use of these trademarks, or any part of this document, is strictly prohibited.

Product Improvements and Updates

TSC Auto ID continuously strives to improve our products. All specifications, features, and designs are subject to change without notice as part of our ongoing product enhancement initiatives. It is recommended to regularly consult the latest documentation to ensure the most up-to-date information is being used. Product users should validate that any new specifications or feature updates for compatibility with their existing applications before implementation.

Proprietary Information and Confidentiality

This manual contains proprietary information of TSC Auto ID Technology Co., Ltd. (TSC), which is intended solely for the use of parties operating and maintaining the equipment described herein. Such proprietary information must not be used, reproduced, or disclosed to any third party for any purpose without the express written permission of TSC.

Disclaimer

While TSC Auto ID makes every effort to ensure the accuracy of the information contained in our specifications and manuals, errors may still occur. TSC Auto ID reserves the right to correct any errors, and disclaims any liability caused by such errors. The information provided in this document is for reference only and does not constitute a guarantee of performance or suitability for any particular application.

Limitation of Liability

TSC Auto ID is not responsible for any direct, indirect, incidental, or consequential damages arising from the use, inability to use, or performance of our products. This includes, but is not limited to, business losses, interruptions, or the loss of business data, even if TSC was advised of the possibility of such damages.

Some jurisdictions may not permit the exclusion of incidental or consequential damages, so the limitations and exclusions outlined here may not apply to you.

User Responsibility

It is the responsibility of the user to comply with all relevant laws and licensing agreements when using this document and the associated products. TSC Auto ID disclaims responsibility for any consequences arising from improper usage or unauthorized modifications to the products.

Security and System Integrity

TSC Auto ID is not responsible for security vulnerabilities introduced through third-party software, unauthorized file uploads, or improper system configurations via any access path. Users are responsible for implementing appropriate security measures to prevent potential risks. TSC Auto ID is not liable for any malfunctions, disruptions, or security issues resulting from such actions.

Table of Contents

1 Introduction 3
1.1 Product Specification 4
2 Operation Overview 8
2.1 Unpacking and Inspection 8
2.2 Print Engine Orientation 9
2.3 Checking the Installation Space 10
2.4 Printer Overview 16
2.5 Operator Control 19
3 Setup 22
3.1 Setting up the Printer 22
3.2 Loading the Ribbon 23
3.3 Loading the Media 25
3.4 Loading Media in Peel-off Mode 31
3.5 Setting up the RFID (Option) 34
4 TSC Console Utility 37
5 Menu Function 38
5.1 Menu Overview 38
5.2 Setting 39
5.3 Sensor 46
5.4 Interface 47
5.5 Advanced 68
5.6 File Manager 71
5.7 Diagnostic 72
5.8 Favorites 73
6 Command Settings 75
6.1 SET GPO 75
6.2 SET GPI 77
6.3 Applicator I/O Interface (DB15F) Circuit Diagram 82
6.4 Applicator I/O Interface (DB25F) Circuit Diagram (optional) 84

7 Troubleshooting 88

7.1 Common Problems 88
7.2 Printing Adjustments 91
7.3 RFID Errors Message 95

8 Ribbon Saver Function (Optional) 98

8.1 Ribbon Saver Operation 98
8.2 Calculation of Ribbon Consumption 100
8.3 Ribbon and Label Specification for Ribbon Saver Function 103

9 Maintenance 104

10 Agency Compliance and Approvals 106

Revision History 114

1 Introduction

Thank you very much for purchasing TSC bar code printer.

TSC's innovative PEX-2000 Series print engine incorporates a robust die cast construction designed for years of reliability, ease of use, and cost-conscious serviceability. The PEX combines a precision print mechanism with high performance electronics to produce labels at up to 18 inches per second, the fastest in its class.

Designed for ease of integration, the PEX features a bolt-compatible construction with a commonly used GPIO interface and an easy to use color display. The PEX offers simple integration into both new and existing label application installations. It is ideal for manufacturing and logistic applications where high speed and high demand label printing is required.

This document provides an easy reference for operating the PEX-2000 series. TSC printers include the Windows labeling software for creating your label template. For system integration, the TSPL/TSPL2 printer programming manual or SDKs can be found on TSC website : https://www.tscprinters.com.

Applications

- Work In Process
- Product Marking
- Compliance Labeling
- Industrial-Duty Printing
- Packing
- Order Fulfillment
- Shipping/Receiving
- Inventory Management Retail
- Product Label
- Event Ticketing

1.1 Product Specification

Item / Printer	6-INCH: PEX-2260L/ PEX-2260R 4-INCH: PEX-2240L/ PEX-2240R	6-INCH: PEX-2360L/ PEX-2360R 4-INCH: PEX-2340L/ PEX-2340R	4-INCH: PEX-2640L/ PEX-2640R
Print resolution	8 dots/mm (203 DPI)	12 dots/mm (300 DPI)	24 dots/mm (600 DPI/ 4-INCH only)
Printing method	Thermal transfer and direct thermal		
Max. print speed (4-INCH)	457mm (18”)/ second	356mm (14”)/ second	152mm (6”)/ second
Max. print speed (6-INCH)	356mm (14”)/ second	305mm (12”)/ second	N/A
Max. print width	4-INCH: 104mm (4.09”) 6-INCH: 168mm (6.61”)		
Max. print length	4-INCH: 25,400mm (1000”) 6-INCH: 14,732mm (580“)	4-INCH: 11,430mm (450”) 6-INCH: 6,604mm (260“)	2,540mm (100”)
1st print position from label (includes liner, if any) edge	2.4mm +/-0.5		
Label (includes liner, if any) edge from mainframe	13.2mm		
Enclosure	Die-cast based print mechanism		
Dimension	4-INCH: 245mm (W) x 300mm (H) x 390mm (D) 6-INCH: 245mm (W) x 300mm (H) x 450mm (D)		
Weight	Net weight: 14.35kg (31.64 lbs.) Gross weight: 17.35kg (38.25 lbs.)		
Carton Dimension	4-INCH: 401mm x 365mm x 518mm 6-INCH: 401mm x 365mm x 573mm		
Ribbon capacity	600m long, max. O.D. 90mm, 1-inch core (ink coated outside or inside)		
Ribbon width	4-INCH: 25.4mm - 114.3mm (1” - 4.5”) 6-INCH: 76mm - 180mm (3” - 7.1")		
Processor	32-bit RISC high performance processor (BGA 536MHz)		

Item / Printer	6-INCH: PEX-2260L/ PEX-2260R 4-INCH: PEX-2240L/ PEX-2240R	6-INCH: PEX-2360L/ PEX-2360R 4-INCH: PEX-2340L/ PEX-2340R	4-INCH: PEX-2640L/ PEX-2640R
Memory	■ 512MB Flash memory ■ 512MB DDR2 RAM memory ■ USB device memory (FAT32) ■ Micro SD card reader for memory expansion, up to 32GB		
Interface	■ RS-232 (Max. 115,200 bps) ■ USB 2.0 (High speed mode) ■ Internal Ethernet 10/100 Mbps ■ USB host *2 (front and rear side), connecting USB storage device ■ GPIO (DB15F) + Centronics		
Power	Auto sensing power supply (20% print ratio): ■ Input: AC 100-240V, 4-2A, 50-60Hz ■ Output: DC 5V, 5A; DC 24V, 7A; DC 36V, 1.4A; Total 243W		
LCD display	■ Multi-language selectable ■ 3.5” IPS QVGA color display ■ 1 status indicator		
Operation switch, button	■ 6 operation buttons (Menu, Pause/Feed, Up, Down, Left, Right)		
Sensors	■ Gap transmissive sensor (Position adjustable, 1 mm - 98 mm) ■ Black mark reflective sensor (Bottom or Top black mark sensor switchable and position adjustable, 5 mm - 92 mm) ■ Ribbon end sensor (transmissive) ■ Ribbon encoder sensor ■ Head open sensor ■ Media cover open sensor ■ Label holder cover open sensor		
Built-in font	■ 8 alpha-numeric bitmap fonts ■ One Monotype Imaging® CG Triumvirate Bold Condensed scalable font ■ Built-in Monotype True Type Font engine		

Item / Printer	6-INCH: PEX-2260L/ PEX-2260R 4-INCH: PEX-2240L/ PEX-2240R	6-INCH: PEX-2360L/ PEX-2360R 4-INCH: PEX-2340L/ PEX-2340R	4-INCH: PEX-2640L/ PEX-2640R
Barcode	■ 1D barcode: Code 11, Code 39, Code 49, Code 93, Code128UCC, Code128 subsets A.B.C, Codabar, Standard 2 of 5, Industrial 2 of 5, Interleave 2 of 5, EAN-8, EAN-13, EAN-14, EAN-128, ITF14, UPC-A, UPC-E, EAN and UPC 2(5) digits add-on, MSI, PLESSEY, PLANET, POSTNET, RSS-Stacked, GS1 DataBar, China Post, Telepen, LOGMARS ■ 2D barcode: PDF-417, Micro PDF 417, Maxicode, DataMatrix, QR code, Aztec, TLC 39, RSS, rMQR code		
Font & barcode rotation	0, 90, 180, 270 degree		
Command set	TSPL-EZD (compatible to EPL, ZPL, ZPL II, DPL); Option for TSPL-EZS (compatible to EPL, ZPL, ZPL II, SBPL)		
Media type	Continuous, die-cut, black mark, fan-fold, notch		
Media wound type	Outside wound		
Media width (Label and Liner)	4-INCH: 16mm - 118mm (0.63” - 4.64”) 6-INCH: 50.8mm - 180mm (2“ - 7.09“)		
Media thickness (Includes liner, if any)	■ Standard (Default): 0.076 mm - 0.305 mm (2.99 mil - 12.01mil) ■ RFID tag: 0.076 mm - 1.2 mm (2.99 mil - 47.2mil), lift up the front gap sensor wall when thickness > 0.9mm ■ Ribbon saver: 0.076 mm - 0.3 mm (2.99 mil - 11.81 mil)		
Label length (peel-off mode)	4-INCH: Standard mode: 12.7mm - 152mm (0.5” - 6”) Small label mode: 5mm - 12.7mm (0.2” - 0.5”, mode switchable on the display) 6-INCH: 25.4mm - 152mm (1” - 6”)		
Label exit angle (peel-off mode)	Angle adjustable: 15°		
Media Pull-in/pull out force	■ The maximum unwind force: 1,800g ■ The maximum rewind force: 2,400g The pulling forces in the label web must be applied evenly.		
Gap height	Min. 2mm (0.79”)		
Black mark height	Min. 2mm (0.79”)		

Item / Printer	6-INCH: PEX-2260L/ PEX-2260R 4-INCH: PEX-2240L/ PEX-2240R	6-INCH: PEX-2360L/ PEX-2360R 4-INCH: PEX-2340L/ PEX-2340R	4-INCH: PEX-2640L/ PEX-2640R
Black mark width	Min. 8mm (0.31”)		
RFID	RAIN UHF Passive (GS1 EPC Gen2 v2 / ISO 18000-63) Fixed Position Antenna Standard Minimum Label/Tag Pitch 0.625” (15.9mm)		
RTC and Buzzer	Standard		
Environment condition	Operation: -5 to 45°C, 25 to 85% non-condensing Storage: -40 to 60°C (-40 to 140˚F), 10 to 90% non-condensing		
Accessories	■ Quick start guide ■ USB port cable ■ Power cord		
Factory option	■ Internal Bluetooth 5.0 MFi		
Dealer option	■ Wi-Fi 802.11a/b/g/n/ac with Bluetooth 4.2 combo module ■ Internal Bluetooth ■ GPIO (DB25F) ■ UHF RFID ■ Ribbon saver		

2 Operation Overview

2.1 Unpacking and Inspection

This printer has been specially packaged to withstand damage during shipping. Please carefully inspect the packaging and printer upon receiving the bar code printer. Please retain the packaging materials in case you need to reship the printer.

Unpacking the printer, the following items are included in the carton.

- 1 Printer unit
- 1 Quick installation guide
- 1 Power cord
- 1 USB interface cable

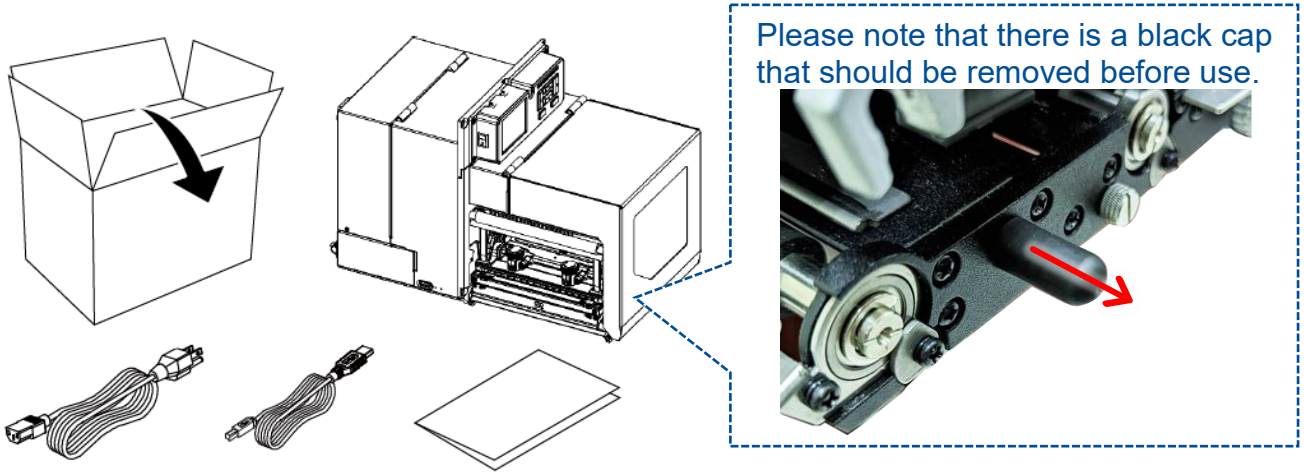

If any parts are missing, please contact the Customer Service Department of your purchased reseller or distributor.

2.2 Print Engine Orientation

The PEX-2000 series are available in a left-hand (4 inch/ 6 inch) configuration and a right-hand (4 inch/ 6 inch) configuration.

PEX-2XX0L series

Left-hand model

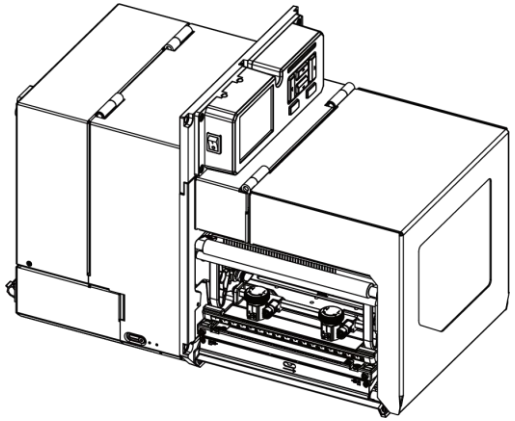

PEX-2XX0R series

Right-hand model

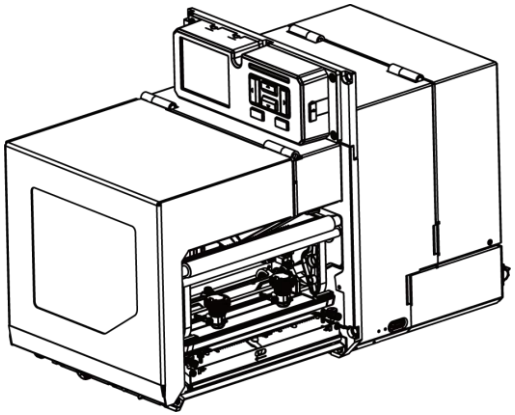

Note:

This document is going to show the components inside the media compartment of a left-hand print engine. A right-hand unit contains a mirror image of those components. Familiarize yourself with these components before continuing with the print engine setup procedure.

2.3 Checking the Installation Space

Please check the space for mounting the print engine into an applicator. Please refer to the dimensions in this section.

4-inch model

Front view	Front view with open media cover
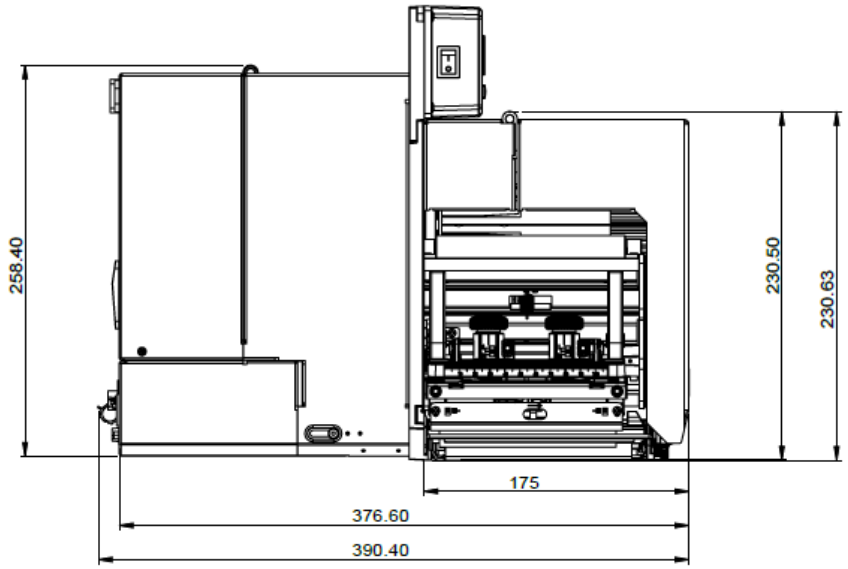	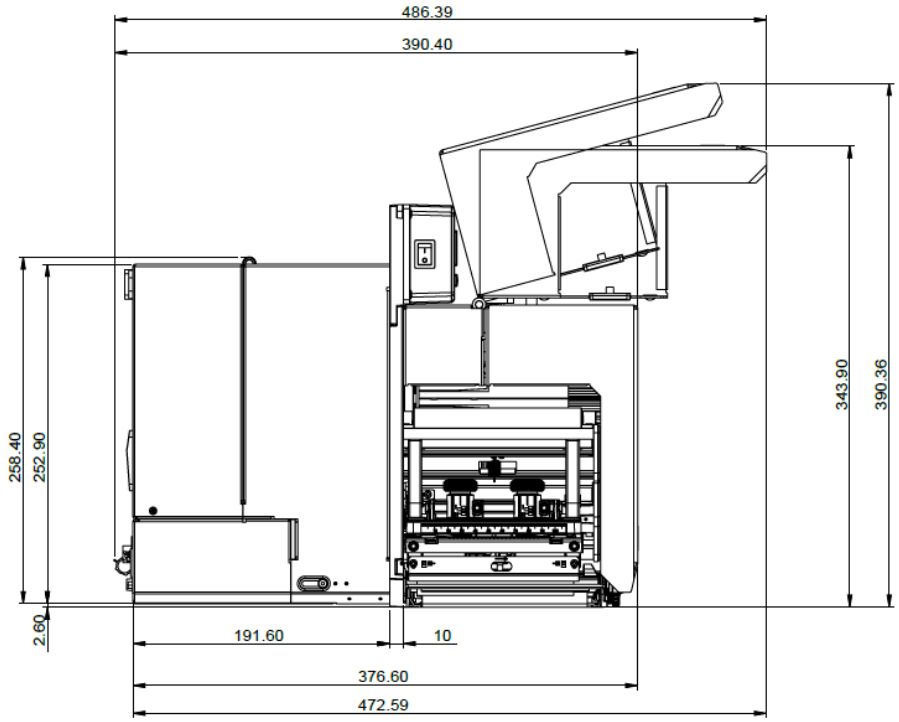

Side view

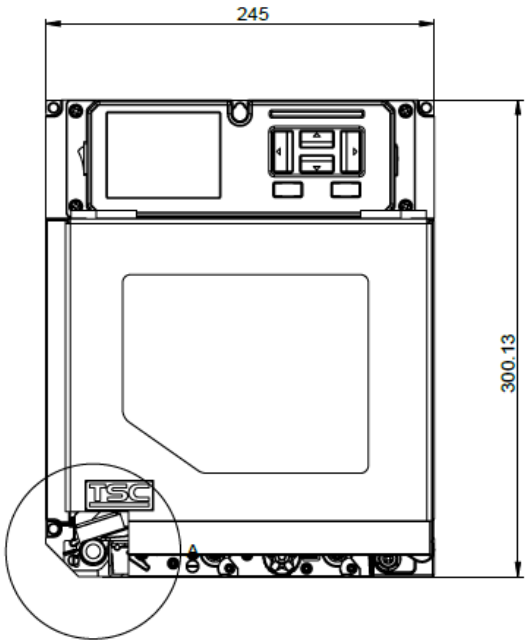
245
300.13

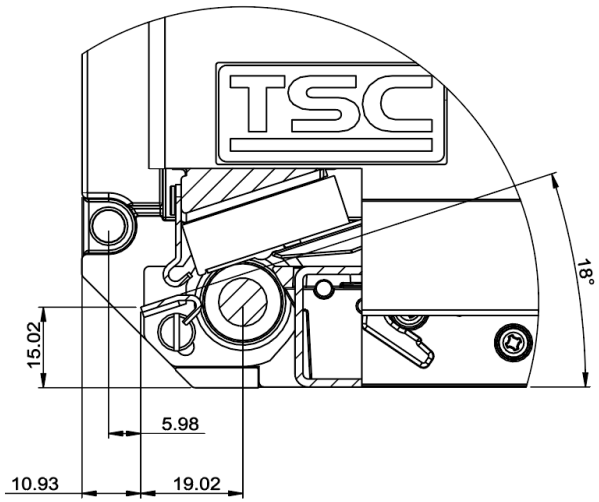
18°
15.02
5.98
10.93
19.02

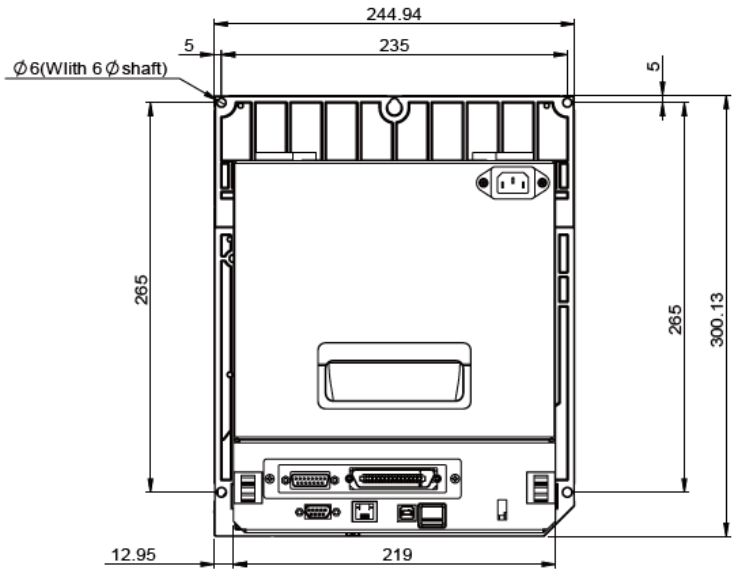
244.94
5
235
Ø6(Wlith 6Ø shaft)
5
265
265
300.13
12.95
219

Top view	Top view without media cover
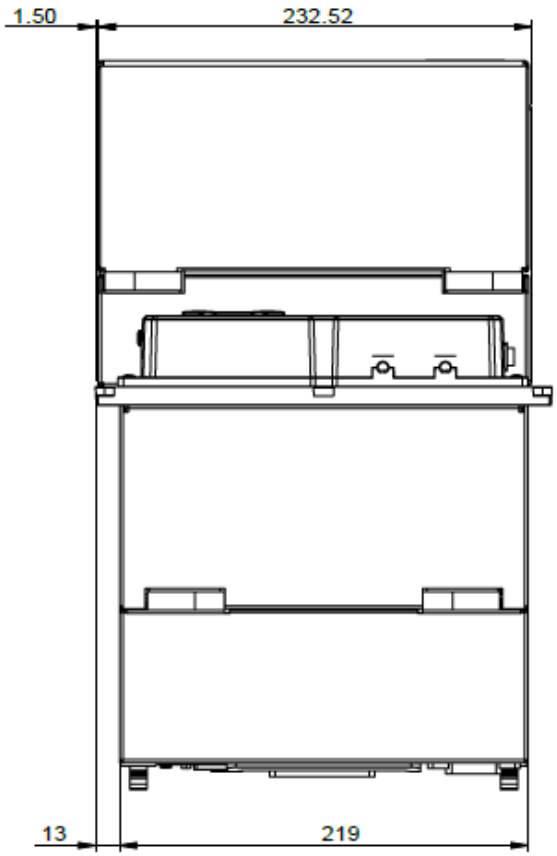	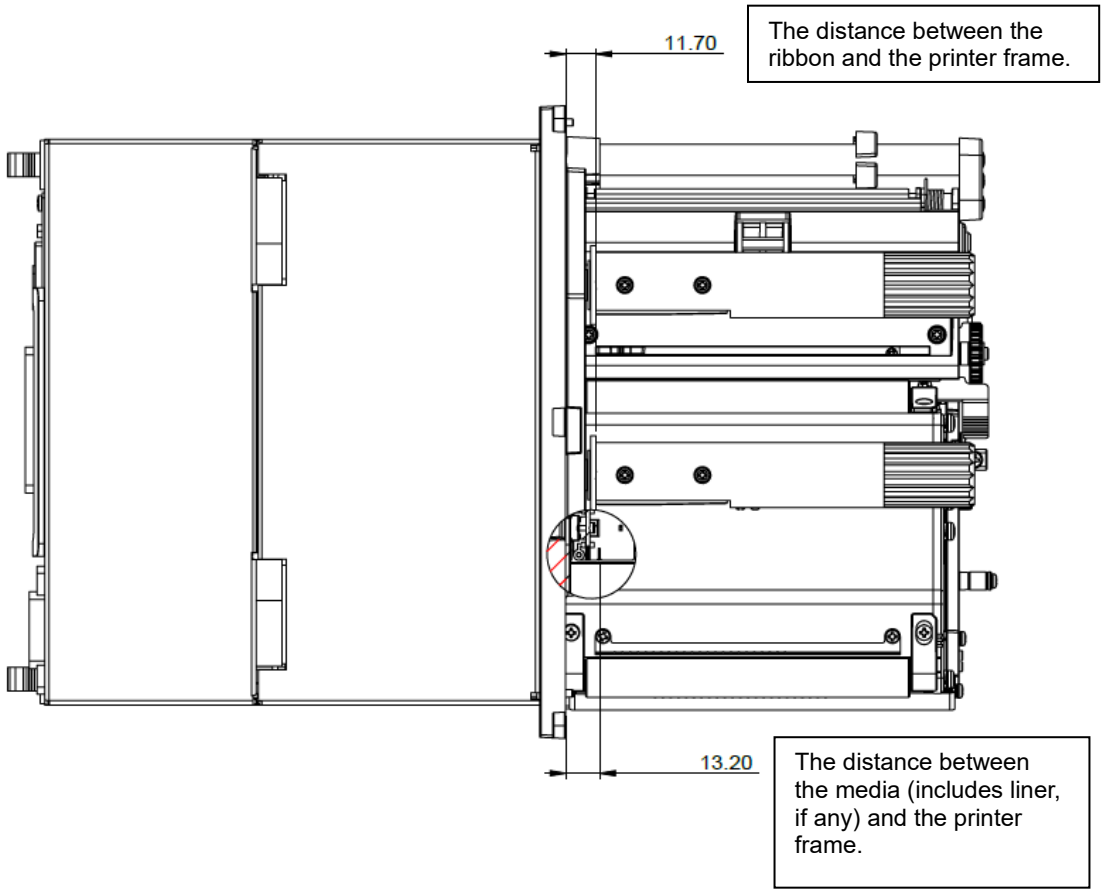

6-inch model

Front view	Front view with open media cover
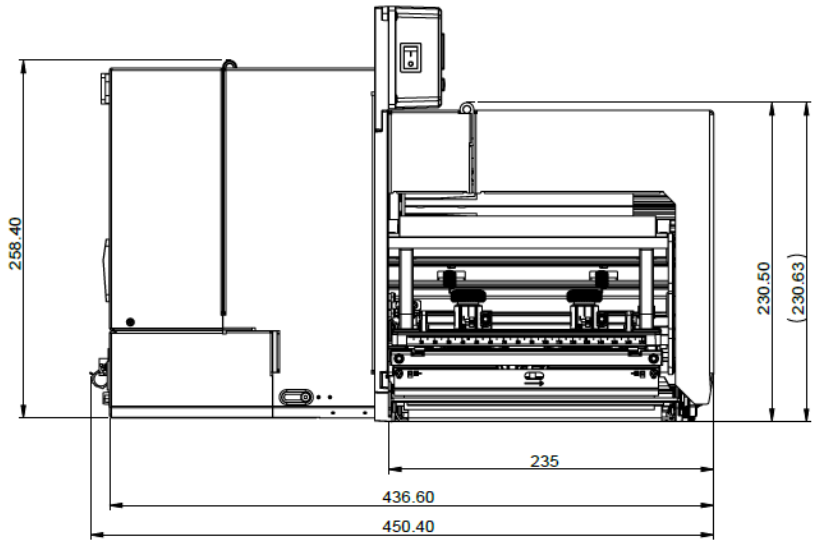	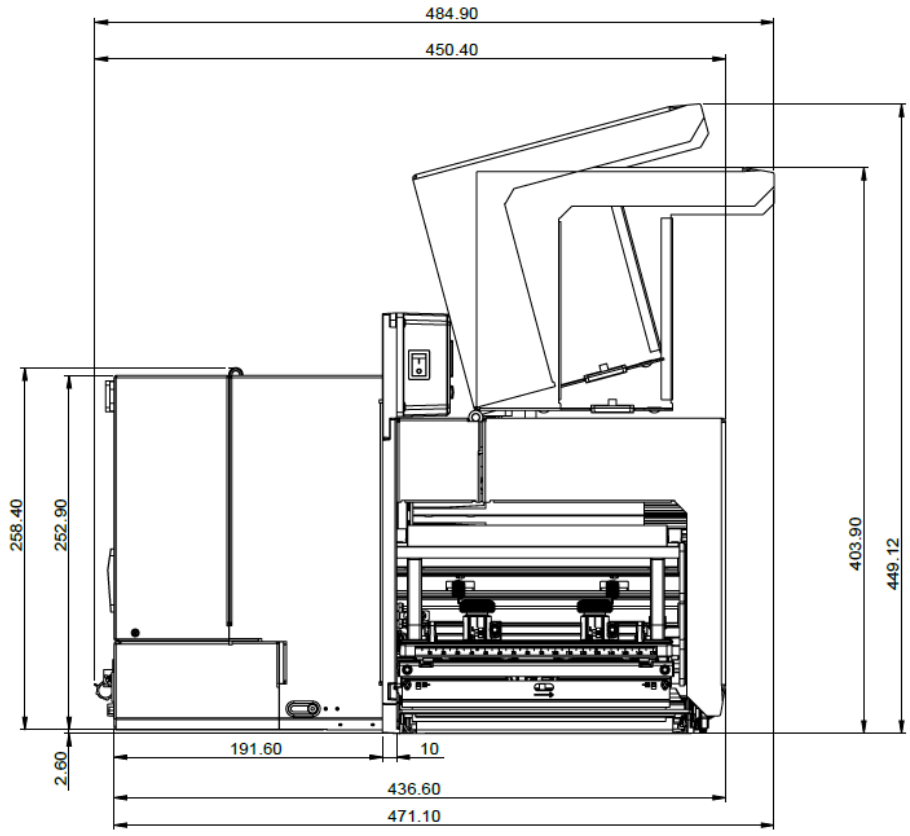

Side view

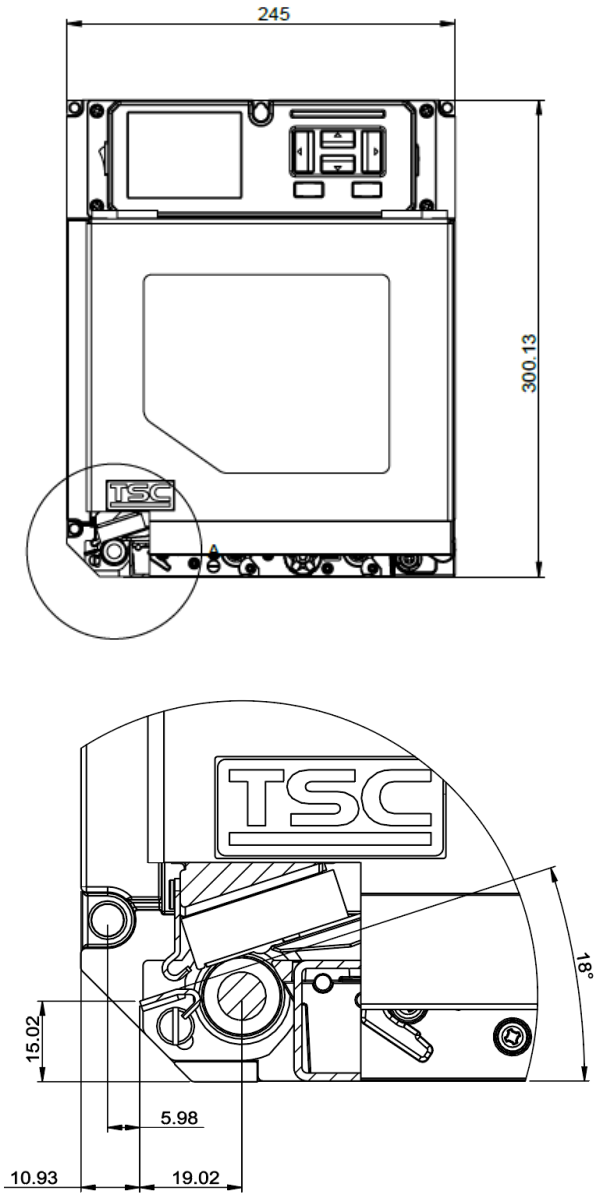
245
300.13
TSC
18°
15.02
5.98
10.93
19.02

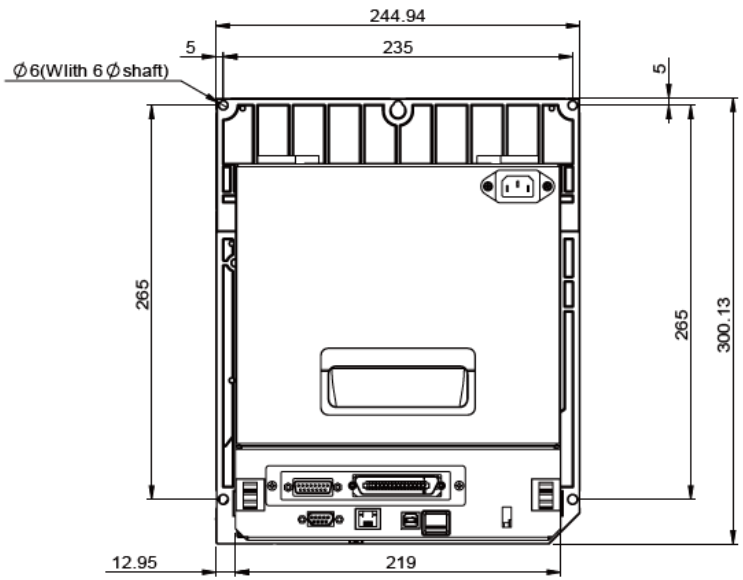
244.94
5
235
Ø6(Wlith 6Ø shaft)
5
265
265
300.13
12.95
219

Top view	Top view without media cover
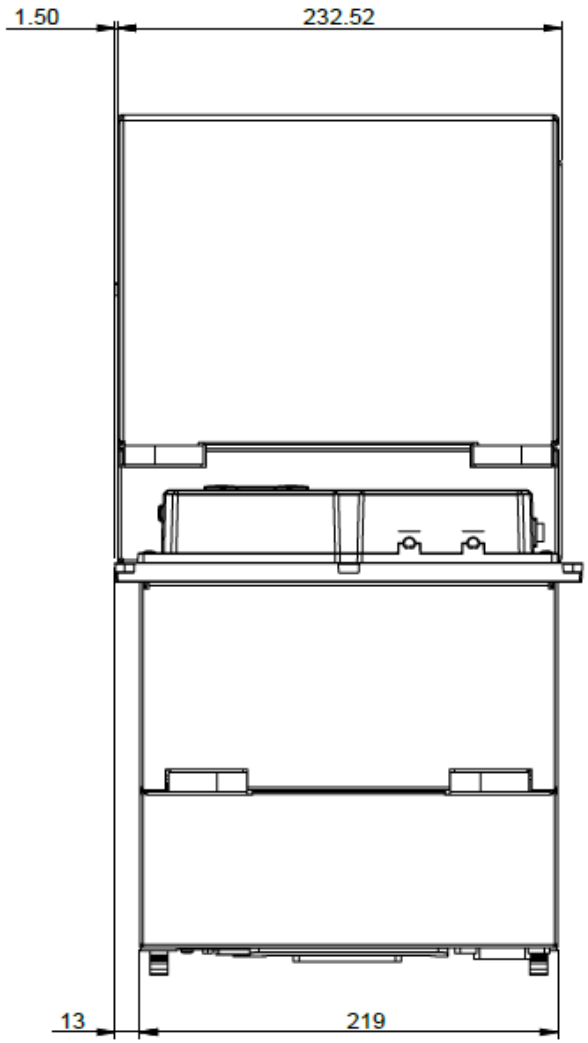	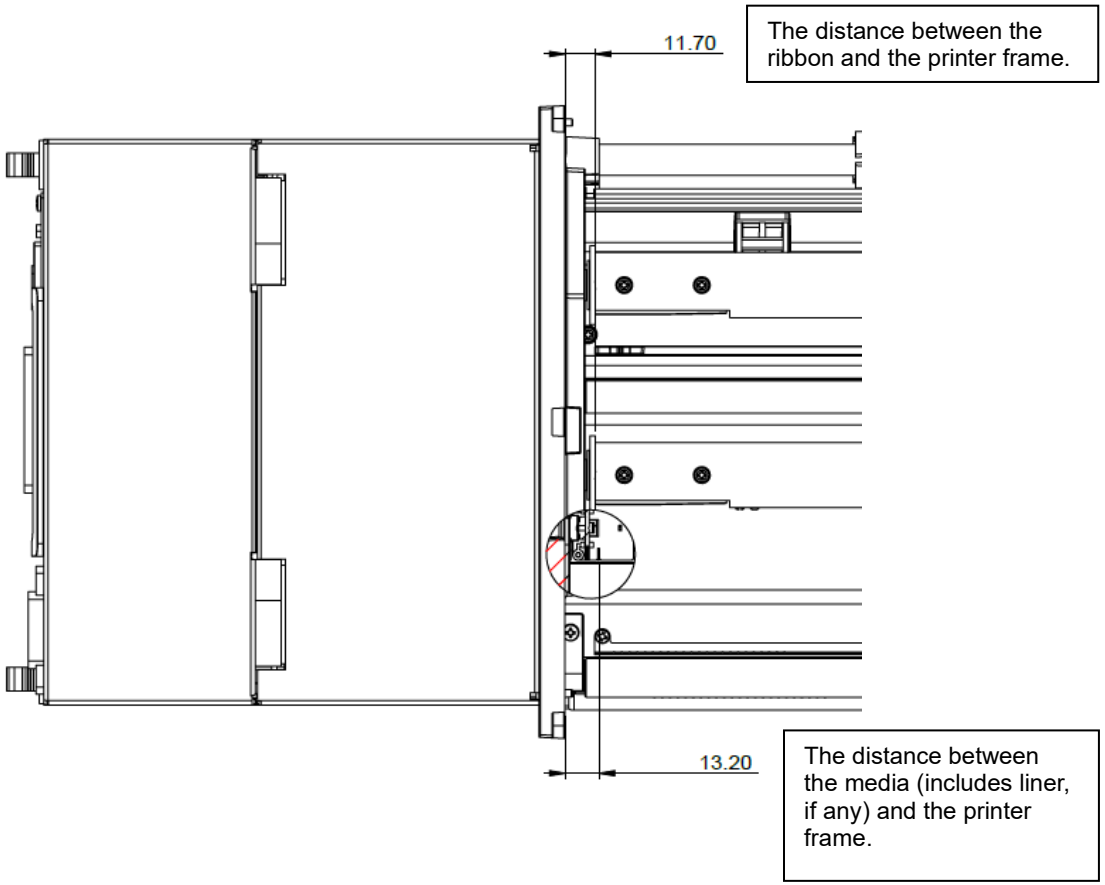

2.4 Printer Overview

2.4.1 Front View

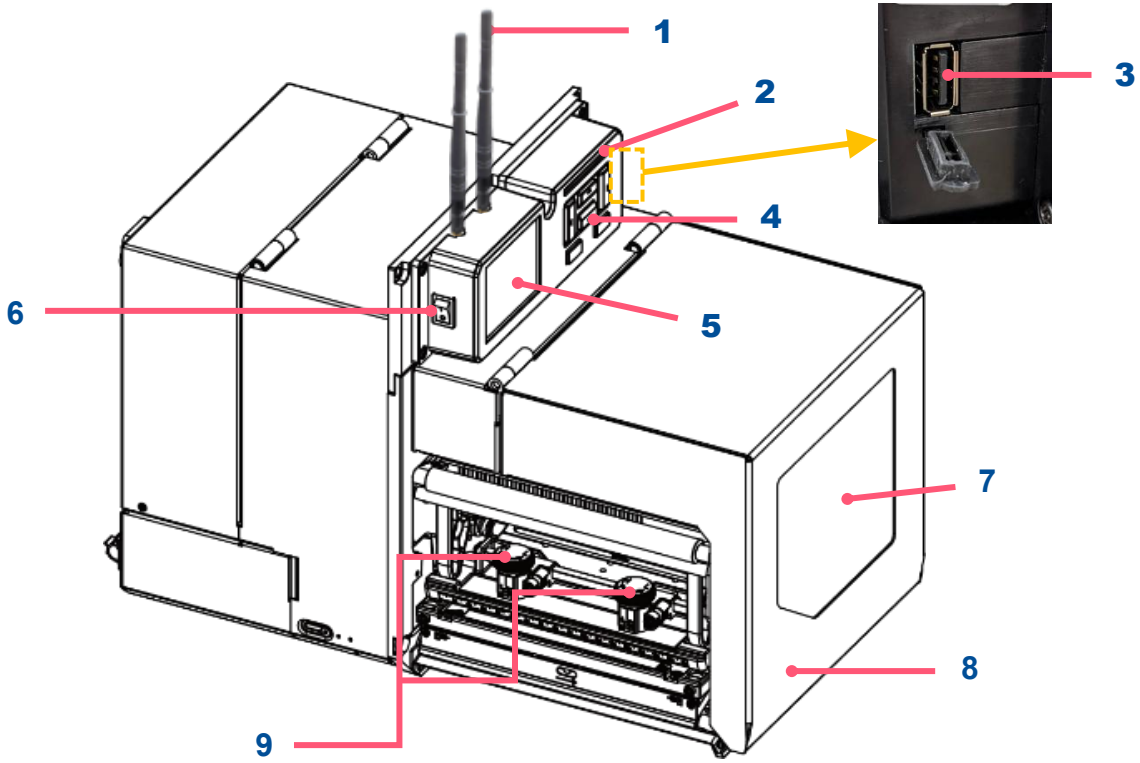

1. Wi-Fi antenna (option)
2. LED indicator
3. USB host
4. Soft keys
5. LCD display
6. Power switch
7. Media view window
8. Printer cover
9. Printhead pressure adjustment knob(s) (4-inch: 1 pc / 6-inch: 2 pcs)

2.4.2 Interior View

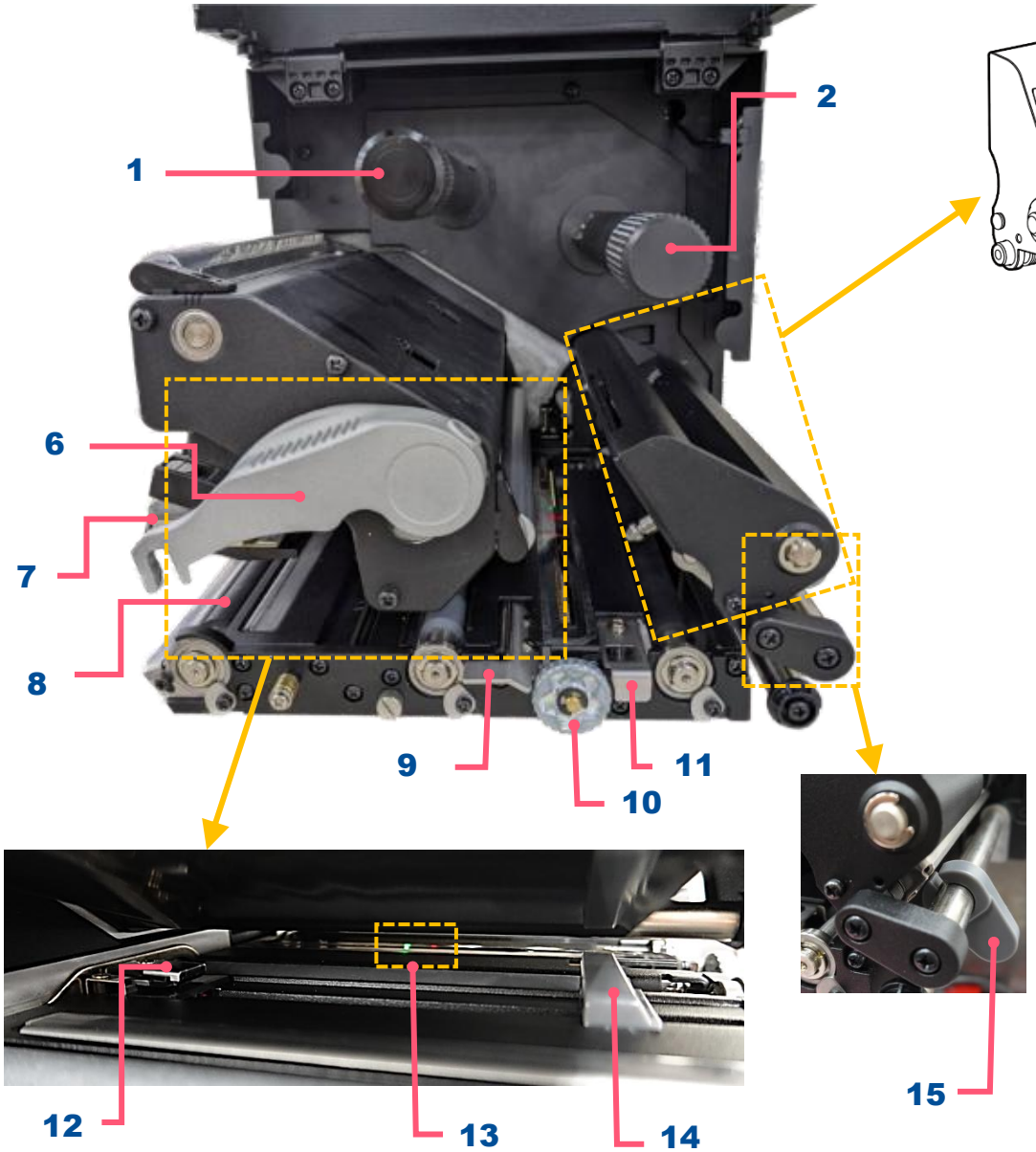

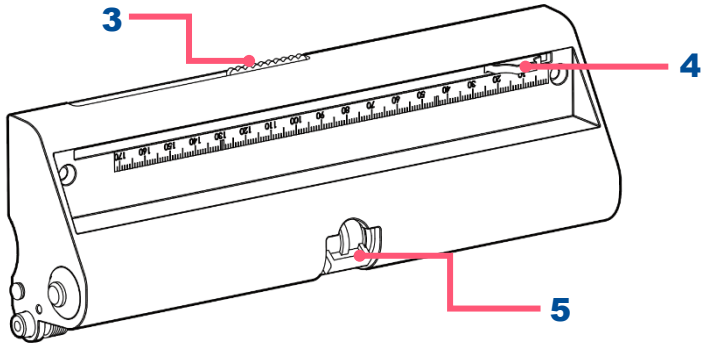

1. Ribbon rewind spindle
2. Ribbon supply spindle
3. Rear gap sensor LED position adjustment bar (6-inch series only)
4. Top black-mark sensor position adjustment bar
5. Rear label holder lock
6. Printhead release lever
7. Printhead
8. Platen roller
9. Peel-off roller release lever
10. Media sensor position adjustment knob
11. Rear label release button
12. Front gap sensor
13. Media sensor LED indicator (Green = rear gap sensor/ Red = back black-mark sensor)
14. Front label guide
15. Rear label guide

2.4.3 Rear View

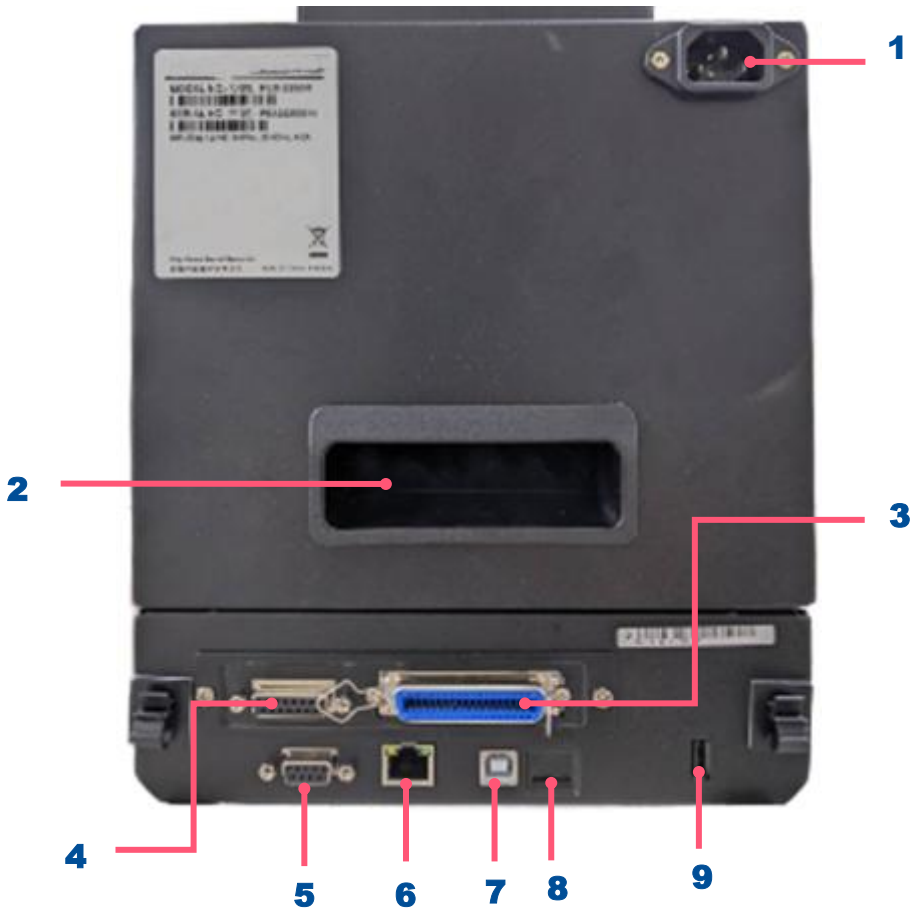

1. Power cord socket
2. Rear cover handle
3. Centronics interface
4. GPIO interface (Applicator interface with DB15F connector +5V I/O)
5. RS-232C interface
6. Ethernet interface
7. USB interface
8. Micro SD card socket
9. USB host

Note:
The interface picture here is for reference only. Please refer to the product specification for the interfaces availability.

2.5 Operator Control

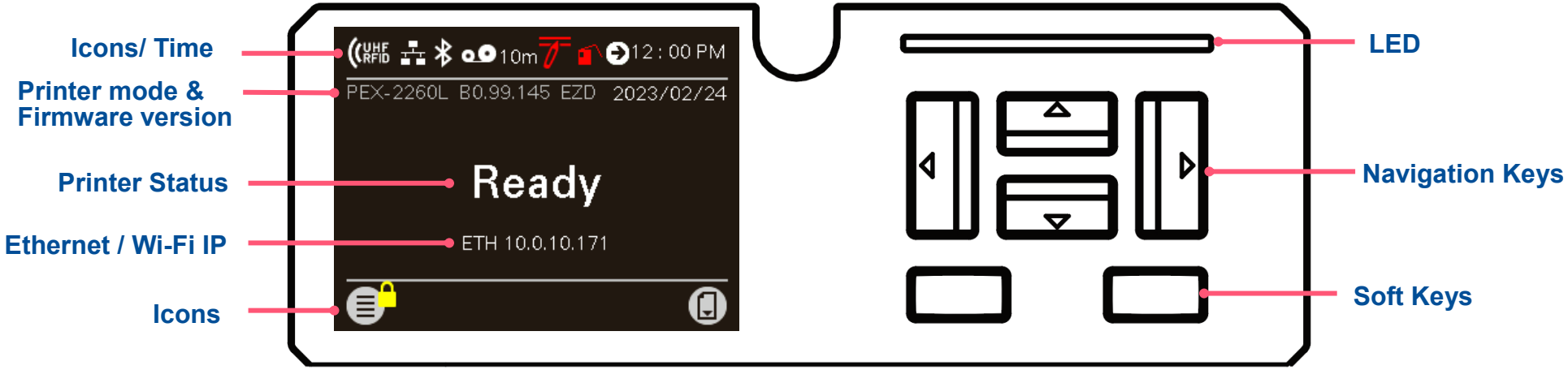

2.5.1 LED Indication and Keypads

LED color indication:

Color	Meaning
(Green)	**Solid:** Power is on and ready to be used. **Flash:** System is downloading data or printer is paused.
(Amber)	System is clearing data.
(Red)	**Solid:** Printer head open, cutter error. **Flash:** Printing error, such as paper empty, paper jam, ribbon empty, or memory error etc.

Keys

Keypads form	Item name	Function
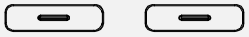	**Soft keys**	The display will show the function for left and right key. The meaning of the soft keys will depend on the UI screen.
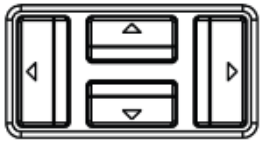	**Navigational keys**	Select / Navigate

Main Page Icons

Icon	Indication
	Wi-Fi device is ready (option).
	Ethernet is connected.
	Bluetooth device is ready (option).
	Remaining amount of ribbon(m).
	Pending documents in the printer
	Security lock.
	Printhead cleaning notice
	Print engine cover open
	Enter the menu.
	Enter cursor (be marked in green) located option.
	Feed button (advance one label).

3 Setup

3.1 Setting up the Printer

1. Refer to the section “Checking the Installation Space” to install the print engine to an applicator.
2. Make sure the power switch is off.
3. Connect the print engine to the computer with the provided USB cable or available connections.
4. Plug the power cord into the AC power cord socket at the rear of the print engine, and then plug the power cord into a properly grounded power outlet.

Note: Please switch OFF the printer before plugging in the power cord to printer power jack.

3.2 Loading the Ribbon

1. Open the media cover and the printhead mechanism.

Left-hand model

Right –hand model

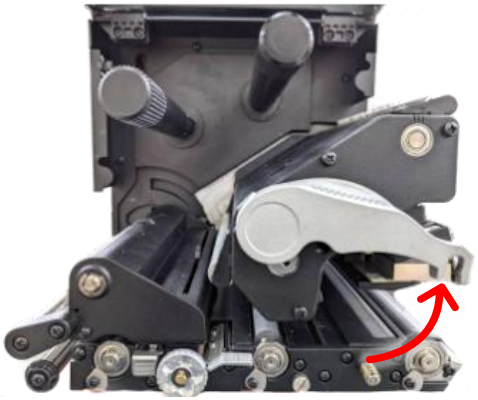

2. Install the ribbon and paper core onto ribbon supply spindle and ribbon rewind spindle.

Left-hand model

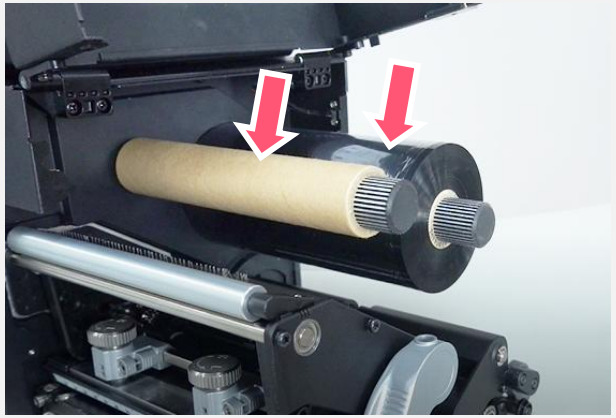

Right –hand model

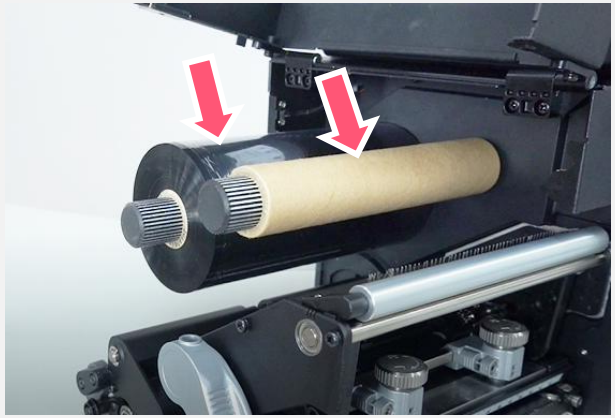

3. Thread ribbon above the ribbon guide bar and through ribbon sensor slot.

Left-hand model

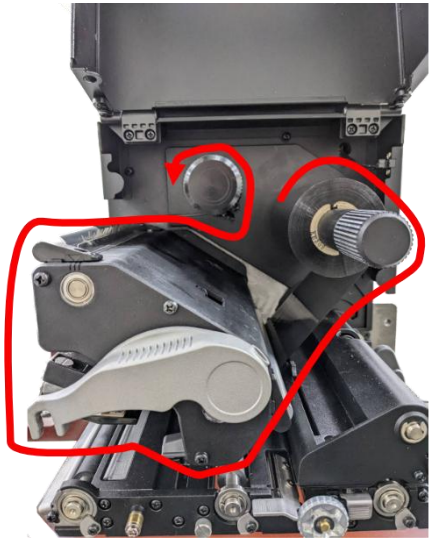

Right –hand model

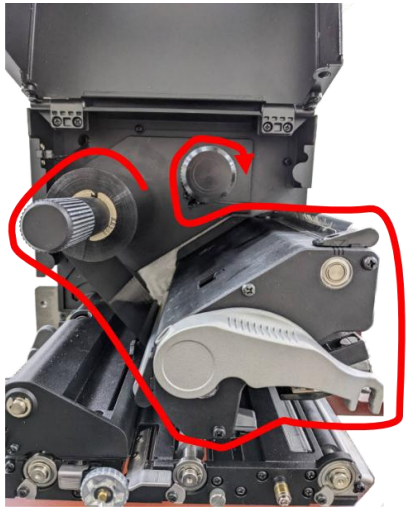

4. Wind the ribbon rewind spindle roughly 3 to 5 circles until ribbon is smooth, properly stretched and wrinkle-free. (ink coated outside available)

Left-hand model

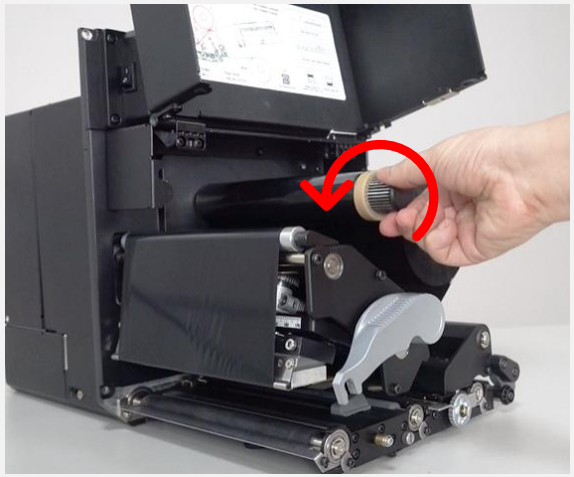

Right –hand model

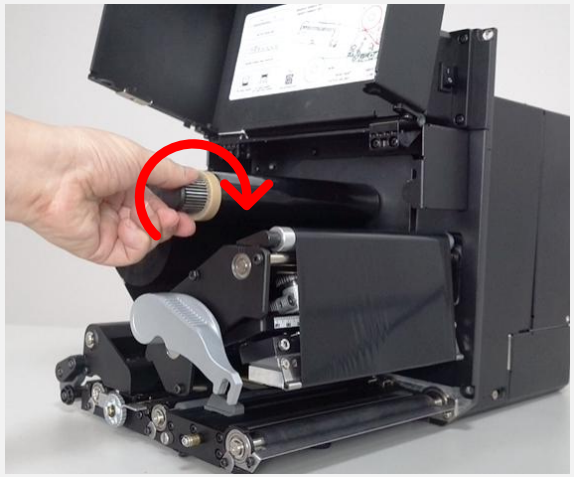

3.3 Loading the Media

1. Open the media cover and printhead mechanism. Open the label holder cover by pressing the rear label release button.

Left-hand model

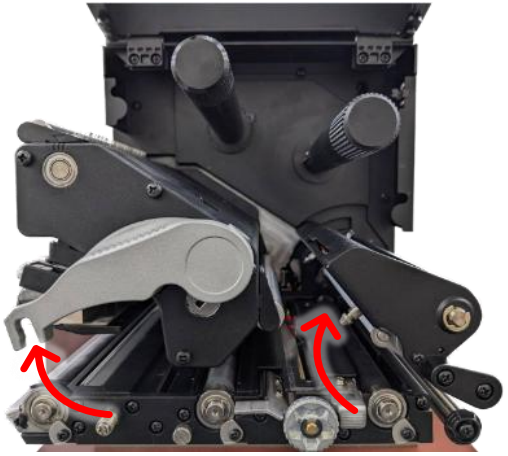

Right –hand model

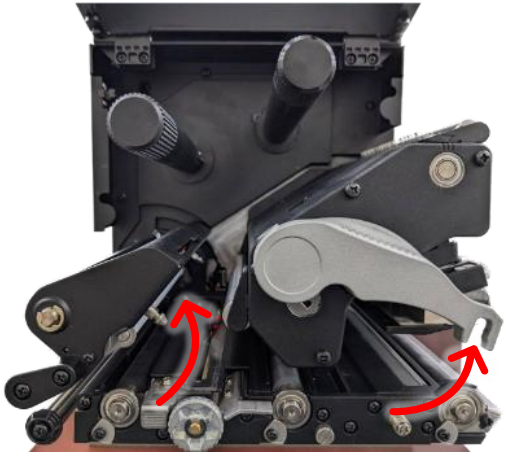

2. Thread the leading edge of the label through the media guide bar pass media sensor, then place the leading edge onto the platen roller. Adjust the rear label guide to fit the label width.

Left-hand model

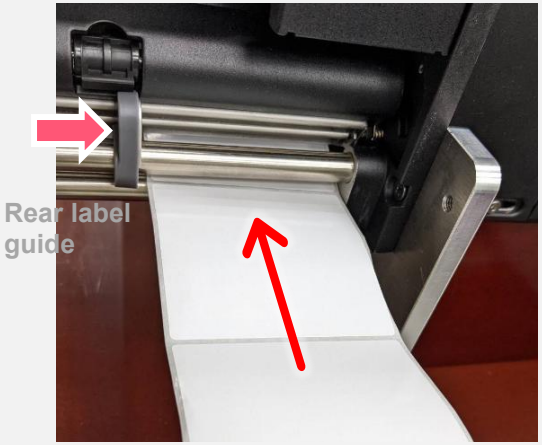

Right –hand model

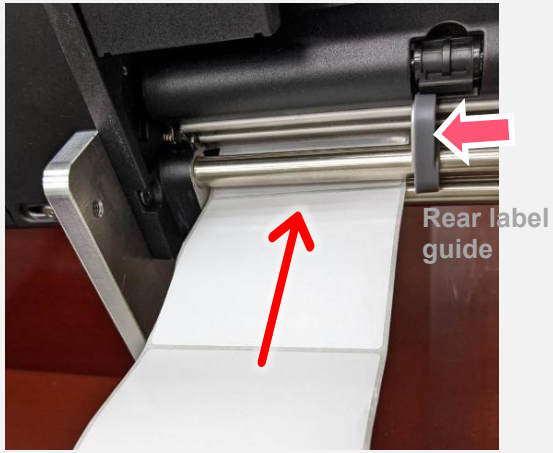

3. Adjust the front label guide to fit the label width. Make sure the label through the front gap media sensor.

Left-hand model

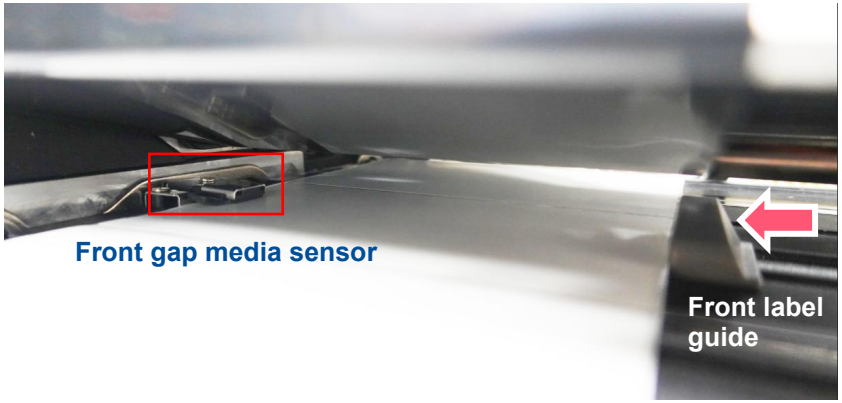

Right –hand model

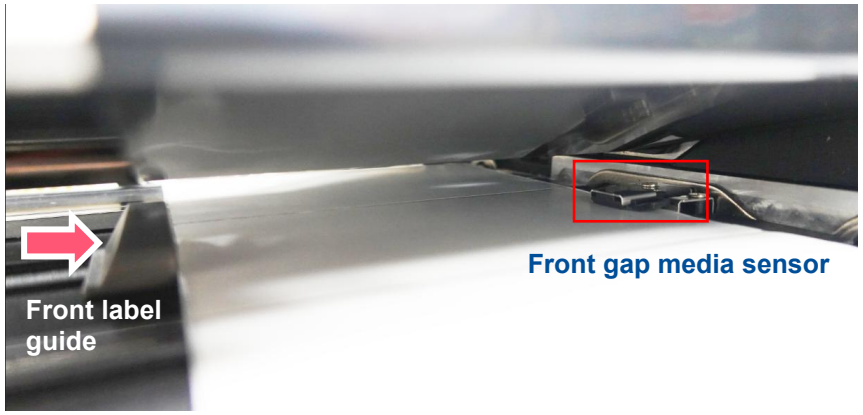

When using the thick media (0.9 mm to 1.2 mm) , you can use a tool to lift up the front gap media sensor to facilitate the media installation.

Left-hand model

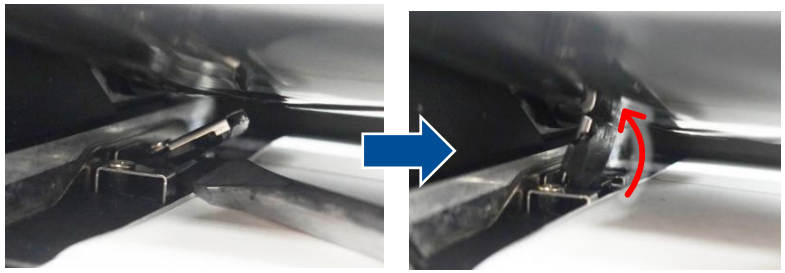

Right-hand model

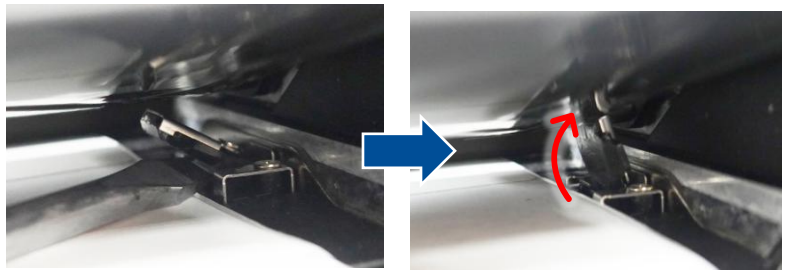

The printer's default gap media sensor setting is on the label holder cover (back), with the green media sensor LED. If you want to use the front gap sensor, enter the operation menu list. Select [Sensor] and then set the [Gap Location] from [Back] to [Front].
Please refer to the section “Sensor” for more information.

4. Move the rear media sensor by adjusting the media sensor position adjustment knob, make sure the sensor is able to sense the black-mark (back side) or gap on media. (Green = gap sensor/ Red = black-mark sensor)

Left-hand model

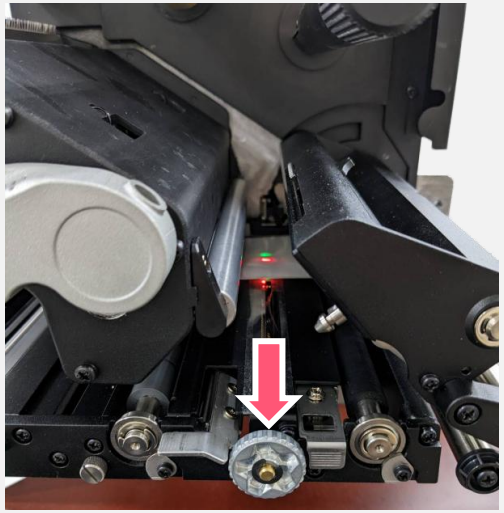

Right –hand model

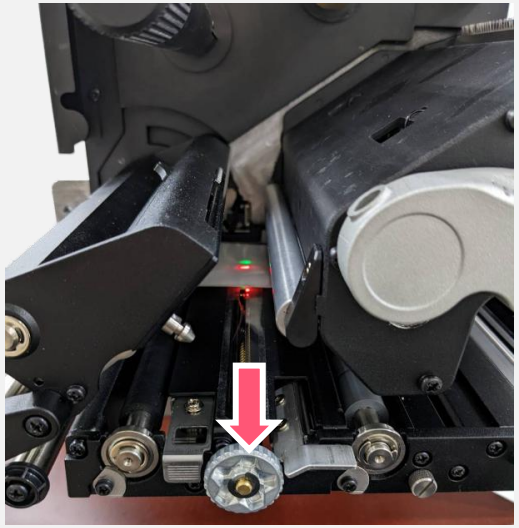

If the width of the gap is greater than 4 inches (6” series printer only), you need to adjust the rear gap sensor LED position adjustment bar (as shown below) so that the sensor can align with the green LED.

If you use the media with black mark on the print side, you need to adjust the position of the black mark sensor. (as shown below) In the operation menu, select [Sensor] and then set the [Black Mark Location] to [Print Side]. After finishing the configuration, adjust the top black mark sensor so that the sensor can align with the black mark on the print side.

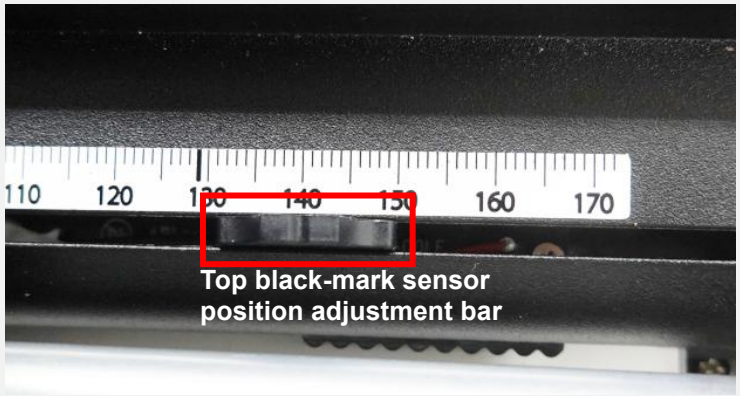

5. Close the printhead mechanism, label holder cover and media cover.
6. Enter the operation menu list. Go to [Sensor] → [Auto Calibration] to calibrate the media sensor.

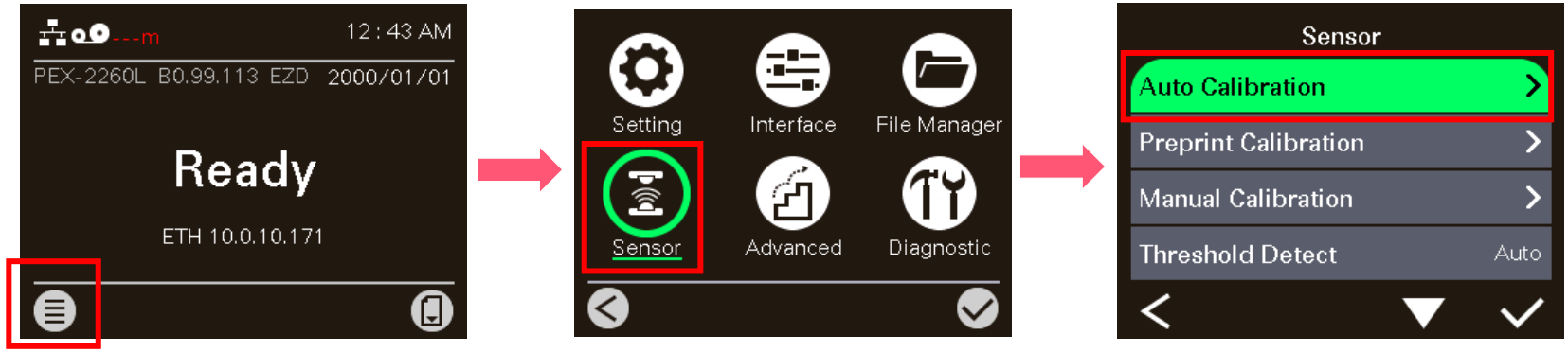

Note: Please calibrate the gap/black mark sensor when changing media.

3.3.1 Loading Media with the Ribbon Saver Mode (Option)

Ribbon Saver helps you save the ribbon when printing. The printhead will lift up after finishing printing until the next label comes in.

1. Go to **LCD Menu** > **Advanced** > Turn **Ribbon Saver** to **Enable.** (Default is disable)

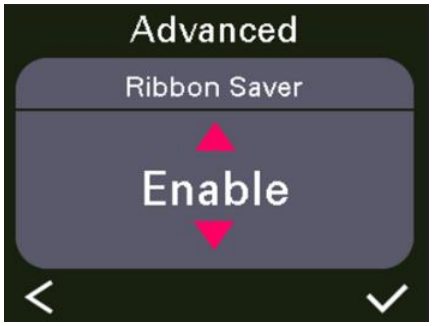

2. Another instruction image will pop up, please release the **Label Holder Cover** and make sure your **Label Holder Lock** has been switched to the position as shown.

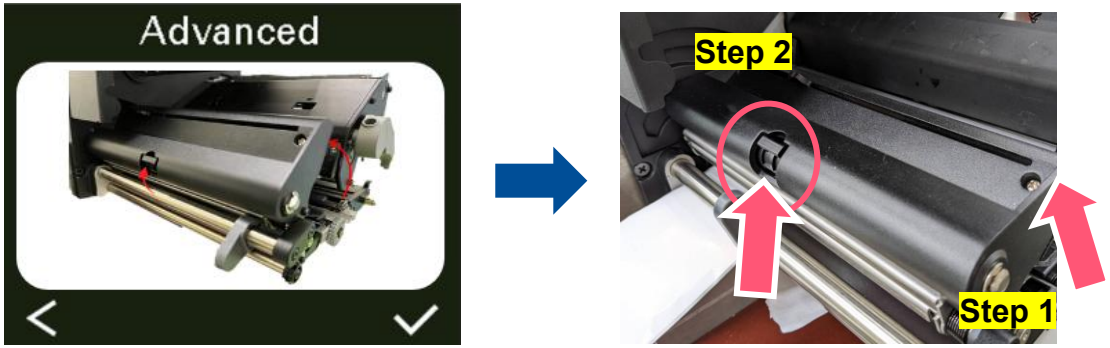

3. Remove the mylar that covers the air ventilation slots.

4. Close the **Label Holder Cover**.

When **Ribbon Saver** is set to **Enable**, the message indicating the ribbon saver efficiency will appear on the LCD display when printing.

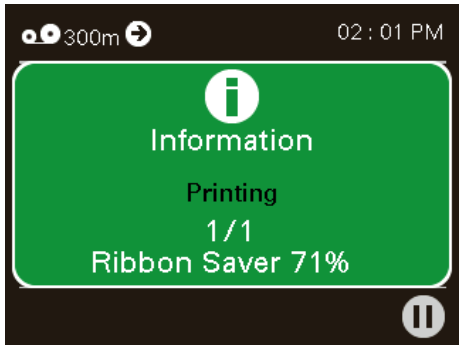

NOTE: To stop Ribbon Saver Mode, go to **LCD Menu** > **Advanced** > **Disable Ribbon Saver** > Release the **Label Holder Cover** and switch the **Label Holder Lock** to the original position.

3.4 Loading Media in Peel-off Mode

1. Open the media cover and refer to the section “Loading the Media” to load the media.

Left-hand model

Right –hand model

2. Open printhead release lever and label guide bar release lever to thread the label through the front of the print engine and remove several labels.

Left-hand model

Right –hand model

3. Open the peel-off roller release lever.

Left-hand model

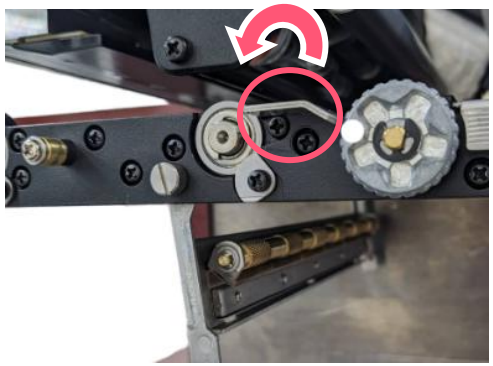

Right –hand model

4. Feed the leading edge of liner through the peel-off roller.

Left-hand model

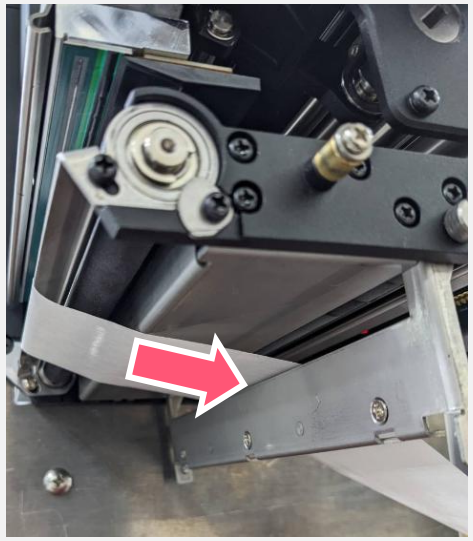

Right –hand model

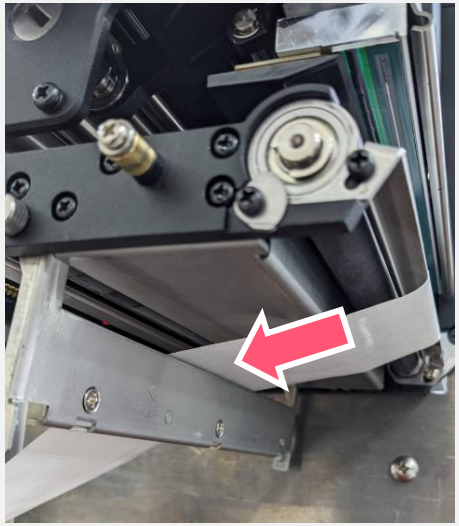

5. Press the roller to close the peel-off roller release lever.

Left-hand model

Right –hand model

6. Close printhead release lever and label guide bar release lever and press **Feed** button to test.

Left-hand model

Right –hand model

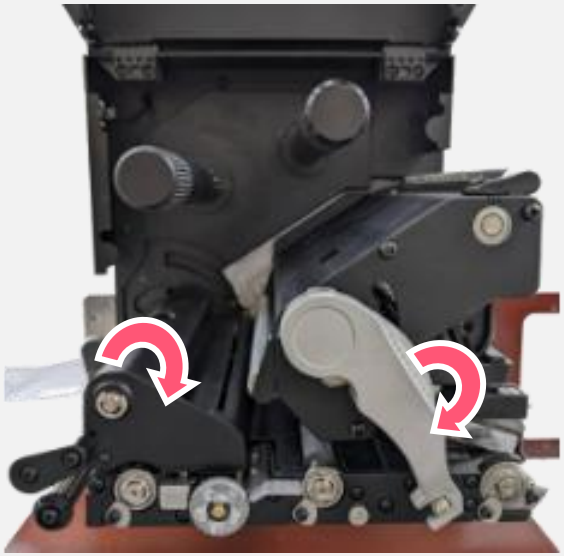

3.5 Setting up the RFID (Option)

3.5.1 Reference Notes

Smart labels are based on an EEPROM technology that requires some time to be programmed. You may notice this minor pause between labels. This time is necessary to better ensure consistent quality and improved reliability.

When dealing with smart labels, it is possible that an occasional RFID tag may need to be written and verified more than once (retry) before being considered acceptable. In this event each retry time will be added to the inter-label pause.

Static electricity can damage the smart labels. Open the media cover of the printer and touch an unpainted metal part of the printer before you handle smart labels. This will discharge any static electricity that may have built up on your hands.

The printers are equipped with an *Auto-Calibration* feature for easy setup eliminating the need to specify exact inlay placement or RFID power settings. The calibration routine has been tested with most major inlays embedded in typical label sizes and will work with many other inlays as well.

Referring to the diagram at right:

Inlays should be centered horizontally across the media (dimension "C"). Consistent, tag-to-tag placement of the inlays is more important than how close to center the inlays are actually placed.

The pitch (overall distance from inlay to inlay) is shown as dimension "P". On-pitch tags and tags with pitch less than 1" may require the printer to back-feed during the encoding and printing process, thus slowing the throughput of the printer. The pitch should be greater than 1", if possible to avoid this condition.

The inlay should be set back from the lead edge of the media (dimension "L") a constant distance tag to tag. For labels longer than 1" this distance should be greater than 0.5" to avoid back-feeding.

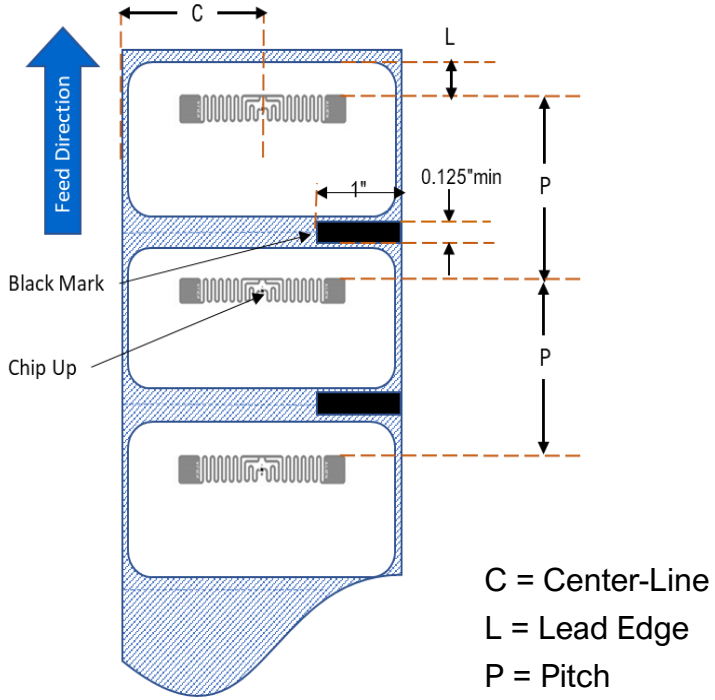

IMPORTANT:

Always test RFID media on your printer before purchasing large quantities of media.

Disclaimer:

The guidelines and suggestions for developing converted RFID labels, are provided by TSC Auto ID on an "as is" basis and without warranty, expressed or implied. TSC Auto ID disclaims any implied warranty of merchantability or fitness for a particular purpose. TSC Auto ID will not be liable under any circumstances for any damages or losses related in any way to use of these guidelines, specifications or other information, including damages which may be incurred as a result of labels not working properly in a specific application. All specifications are subject to change without notice. Testing of the converted labels in the printer is strongly recommended prior to production quantities.

3.5.2 RFID Calibration

The PEX-2000 printer has an **RFID** antenna coupler design that supports a wide variety of tag types.

Left-hand model

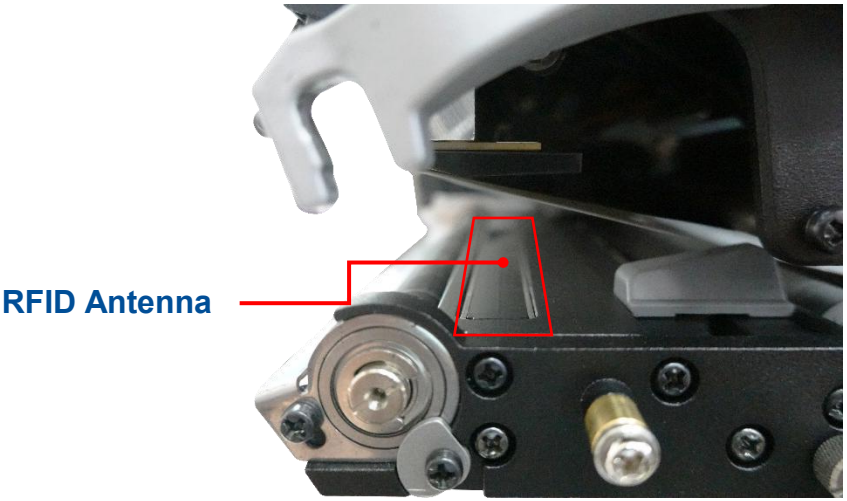

Right –hand model

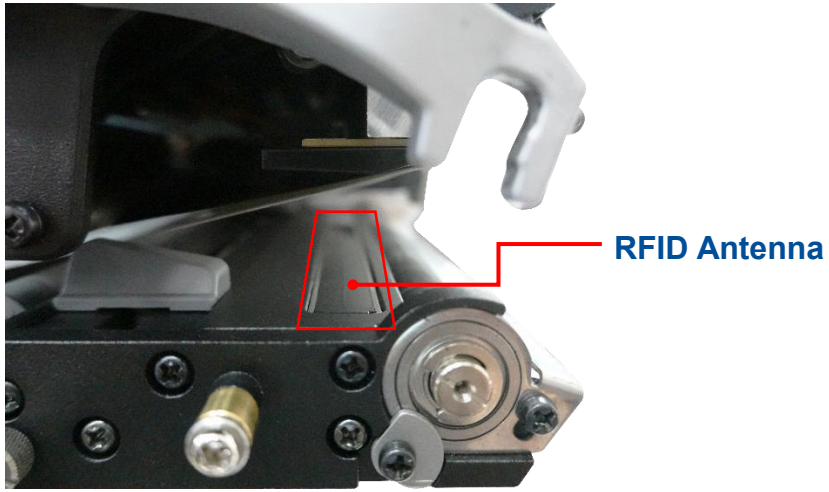

1. Refer to the section “Loading the Media” to load the RFID media.
2. Enter the operation menu list. Go to [Sensor] → [Auto Calibration] or [Preprint Calibration] to calibrate the media sensor first.
   Note: For RFID with gap type media, it is recommended to use this [Preprint Calibration] item for sensor calibration.
3. Then enter the menu list. Go to [Interface] → [RFID] → [Tag Calibration] → [Do RFID Calibrate] to calibrate the FRID media.
4. Depending on the tag type and tag length, the calibration can take several minutes. At the end of calibration either a Green or Red window pops up. A green window signifies successful calibration and a red window means calibration has failed.
5. If calibration fails, you will see a red screen. Press the key to clear the failure notice. In some cases, it may be due to an incompatibility between the tag and the reader. After calibration is complete, press the key to continue, the RFID calibration values will be preserved. For more information, please refer to the section “RFID (Option)”.

4 TSC Console Utility

TSC Console (PC Version) is an all-in-one management tool that integrates **Printer Management, Diagnostic Tool, CommTool**, and **Printer Settings**, designed specifically for a wide range of **TSC printers**.
It enables IT personnel to easily deploy, manage, monitor, and troubleshoot both wired and wireless connections for single or multiple printers. Users can adjust printer settings and status, download graphics, deploy fonts, images, and label templates, upgrade firmware, and send additional commands to multiple printers simultaneously.
With its intuitive Windows graphical interface, **TSC Console** simplifies printer setup and daily management, while its integrated management capabilities enhance system stability—ensuring printers remain operational, reliable, and easy to maintain.
Please visit TSC's official website to download this utility, and scan the QR code below to access the **TSC Console Manual** for detailed usage instructions.

5 Menu Function

5.1 Menu Overview

There are 6 categories on the menu. Users can easily set the settings of the printer without connecting the computer. Please refer to following sections for more details.

Setting: To set up the printer settings for TSPL & ZPL2.

Sensor: To calibrate the selected media sensor.

Interface: To set the printer interface settings.

Advanced: To set LCD, initialization, cutter type,…etc.

File Manager: To check and manage printer's memory storage.

Diagnostic: To check printer and help users to troubleshoot the problems.

5.2 Setting

Press the right soft key to switch the TSPL, ZPL2, and SBPL. Select the item by navigational key and press right soft key to enter the selected item.

Note:
TSPL is TSC® printer language.
ZPL2 is an emulation of Zebra® printer language.
SBPL is an emulation of Sato® printer language.

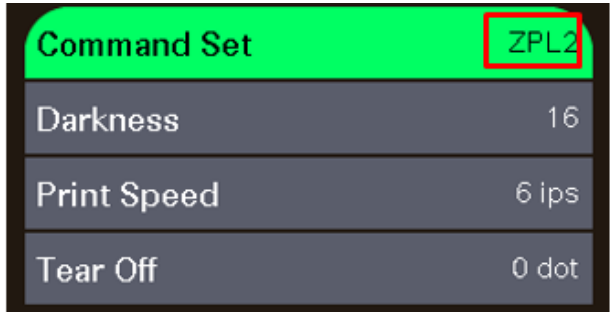

5.2.1 TSPL

TSPL category can set up the printer settings for TSPL.

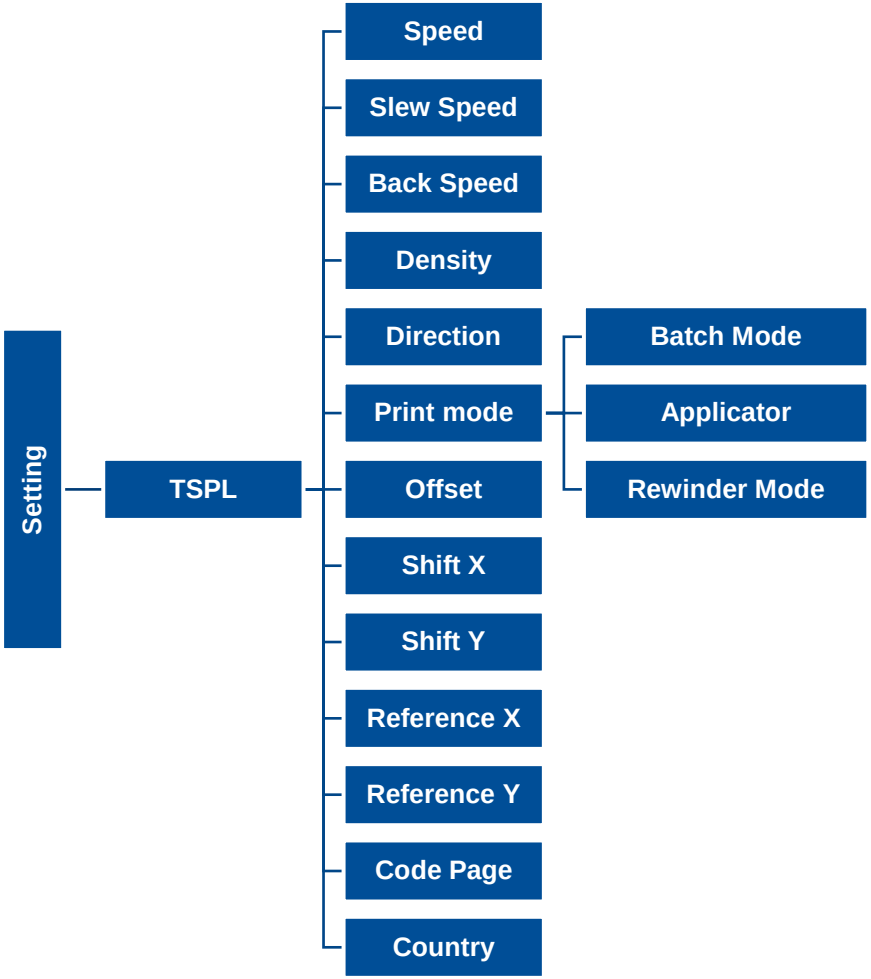

Item	Description	Default
Speed	Set the print speed. Setting range: 2 - 18 for 203dpi; 2 – 14 for 300dpi; 1.5 - 6 for 600dpi.	**203 dpi: 8** **300 dpi: 6** **600 dpi: 4**
Slew Speed	Set feed speed	**203 dpi: 8** **300 dpi: 6** **600 dpi: 4**
Back Speed	Set back speed	**2**
Density	Set printing darkness. Setting range: 0 to 15, and the step is 1.	**8**
Direction	Set the printout direction. Setting Value: 0 and 1. Direction 0: Direction Direction 1: Direction	**0**
Print mode	Set the print mode. There are 3 modes in total: **Batch Mode:** Once finishing the printing process, label will be fed to the tear plate location. **Applicator**: The printer prints a label when it receives a signal from the applicator. **Rewinder Mode:** Enable the label rewinder mode.	**Applicator**
Offset	Adjust media stop location. Available value setting range: -999 dots to 999 dots.	**0 dot**
Shift X	Adjust print position. Available value setting range: -999 dots to 999 dots.	**0 dot**
Shift Y		**0 dot**
Reference X	Set the origin of printer coordinate system horizontally and vertically. Available setting range: 0 dot to 999 dots.	**0 dot**
Reference Y		**0 dot**
Code page	Set the code page of international character set.	**850**
Country	Set the country code. Available setting value range: 1 to 358.	**001**

Note: If printing from enclosed software/driver, the software/driver will send out the commands, which will overwrite the settings set from the panel.

5.2.2 ZPL2

This “ZPL2” category can set up the printer settings for ZPL2.

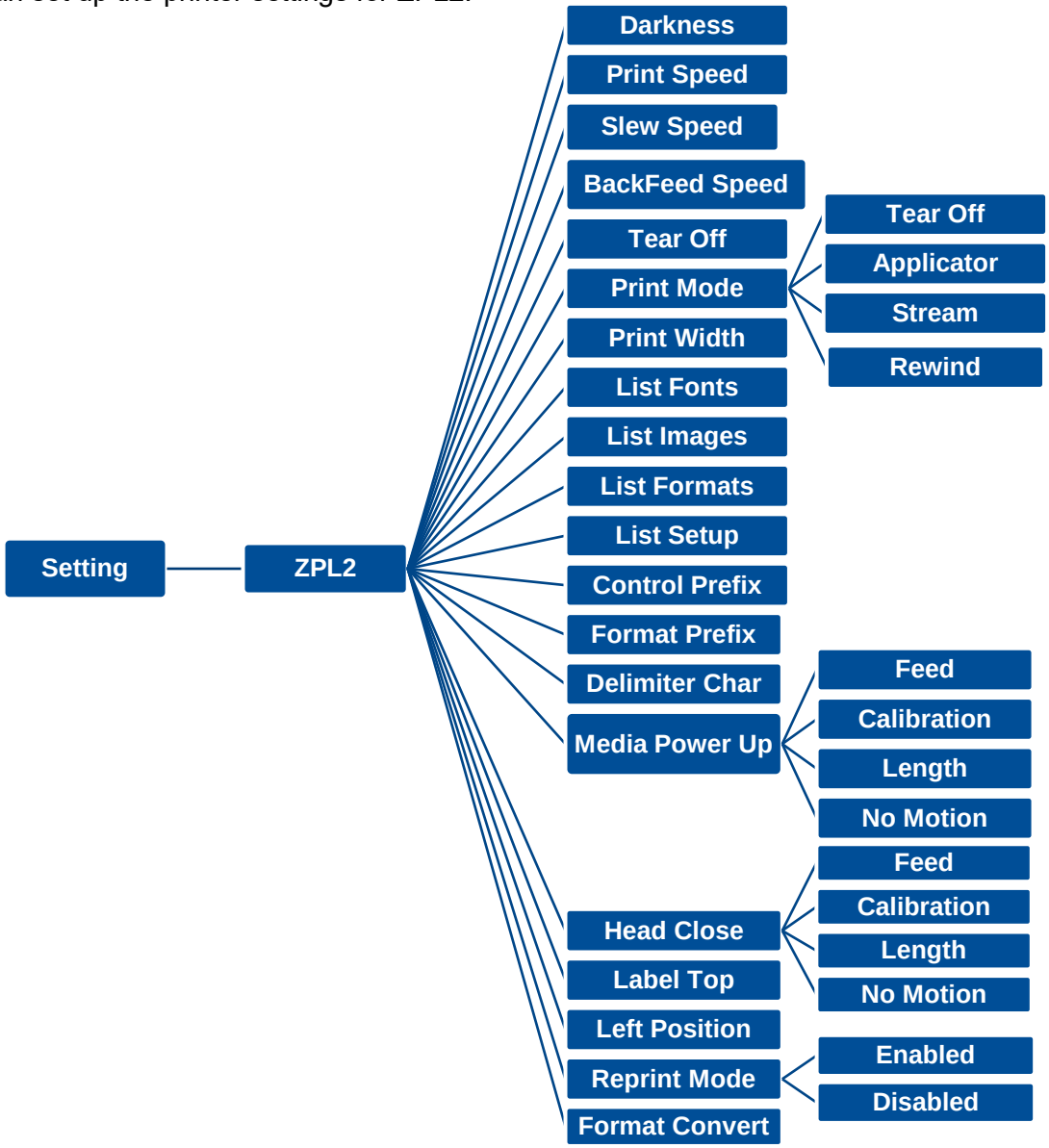

Item	Description	Default
Density	Set the printing darkness. Available setting range: 0 to 30.	**16**
Print Speed	Set the print speed. Available setting range: 2 -18 for 203dpi; 2 - 14 for 300dpi; 1.5 - 6 for 300dpi.	**203 dpi: 6** **300 dpi: 4** **600 dpi: 3**
Slew Speed	Set feed speed.	**203 dpi: 6** **300 dpi: 4**
BackFeed Speed	Set back speed.	**2**
Tear Off	Adjust media stop location. Available setting value range: -120 to 120 dots.	**0 dot**
Print mode	Set the print mode. There are 4 modes in total: **Tear Off:** Once finishing the printing process, label will be fed to the tear plate location. **Applicator**: The printer prints a label when it receives a signal from the applicator. **Stream:**: The print engine prints a batch of labels with backfeed occurring only at the start and end of the batch instead of between individual labels. **Rewind:** Enable the label rewinder mode.	**Tear Off**
Print Width	Set the print width. Available setting range: 2 to 999 dots.	**812**
List Fonts	Print the current fonts list from the memory devices to the label.	**N/A**
List Images	Print current printer available images list stored at the memory device to the label.	**N/A**
List Formats	Print current printer available formats list from the memory devices to the label.	**N/A**
List Setup	Print current printer configuration to the label.	**N/A**
Control Prefix	Set control prefix character.	**N/A**
Format Prefix	Set format prefix character.	**N/A**
Delimiter Char	Set delimiter character.	**N/A**

Media Power Up	Set the action of the media when turning on the printer. **Feed:** Printer will advance one label. **Calibration:** Printer will make calibration. **Length:** Printer determine length and feed label. **No Motion:** Printer will not move media.	**No Motion**
Head Close	Set the action of the media when closing the printhead. **Feed:** Printer will advance one label. **Calibration:** Printer will make calibration. **Length:** Printer determine length and feed label. **No Motion:** Printer will not move media.	**No Motion**
Label Top	Adjust print position vertically on the label. Value range: -120 to +120 dots.	**0**
Left Position	Adjust print position horizontally on the label. Value range:-9999 to +9999 dots.	**0**
Reprint Mode	Reprint the last label by pressing button on printer's control panel.	**Disabled**
Format Convert	Select the bitmap scaling factor. The first number is the original dots per inch (dpi) value; the second the dpi which you would like to scale.	**None**

Note: printing from other software/drive will overwrite the settings set from the panel.

5.2.3 SBPL (Only available on EZS version firmware)

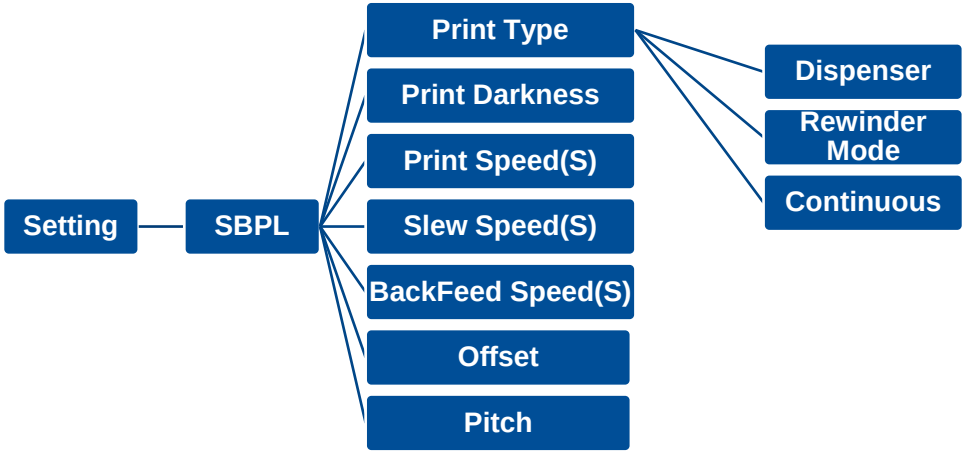

Item	Description	Default
Print Type	This item is used to set the print mode. There are three modes as below, **Dispenser**: Once printer complete printing 1 label, it will wait for being removed. **Rewinder mode**: The print engine prints without pausing between labels. The media is wound onto a core after printing. **Continuous**: Print the specified number of media	Dispenser
Print Darkness	Use this item to setup printing darkness. The available setting range is from 0 to 10. You may need to adjust your density based on selected media.	3
Print Speed	Use this item to setup print speed. Available setting range: 2 - 18 for 203dpi; 2 - 14 for 300dpi; 1.5 - 6 for 600dpi.	203 dpi: 6 ips 300 dpi: 4 ips 600 dpi: 3 ips
Slew Speed	Use this item to setup feed speed. Setting value is up to 8 ips.	203 dpi: 6 ips 300 dpi: 4 ips 600 dpi: 3 ips
BackFeed Speed	Use this item to setup back feed speed. Setting value is up to 6 ips.	2 ips
Offset	Use this item to adjust the offset position. Offset adjusts the back/feed/stop position for Tear-off/Cut/Dispense operation.	0 dot
Pitch	Use this item to adjust the leading edge of media position thus effects the vertical print position placement.	0 dot

5.3 Sensor

This option is used to calibrate the selected sensor. We recommend calibrate the sensor before printing when changing the media.

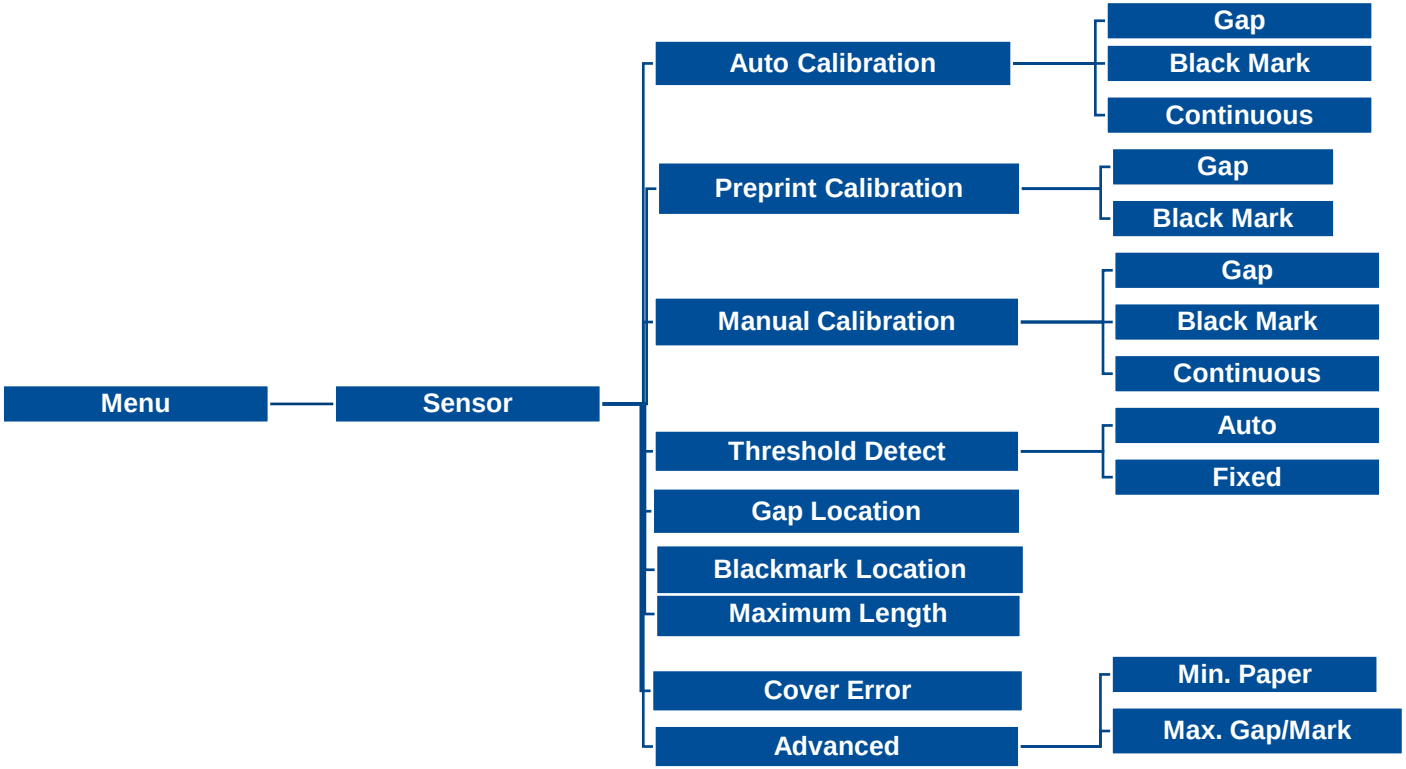

Item	Description	Default
Auto Calibration	Set the media sensor type and calibrate the selected sensor automatically.	**N/A**
Preprint Calibration	Calibrate the preprint labels.	**N/A**
Manual Calibration	In case Auto Calibration does not work, please use “Manual” function to set the paper length and gap or black mark size to complete the calibration setting.	**N/A**
Threshold Detect	Set sensor sensitivity in fixed or auto.	**Auto**
Maximum Length	Set the maximum length for label calibration.	**761mm**
Gap Location	Determine which gap sensor as the main gap sensor.	**Rear**

Black Mark Location	This option is used to set the upper or lower black mark sensor as the primary transmitter. Please set it according to the position of the black marker on the media (Back side/ Print side)	**Back side**
Cover Error	Enable pop up the error when opening the media cover	**Disable**
Advanced	Set the minimum paper length and maximum gap or black mark length for auto-calibration.	**0 mm**

5.4 Interface

Interface can set the printer interface settings.

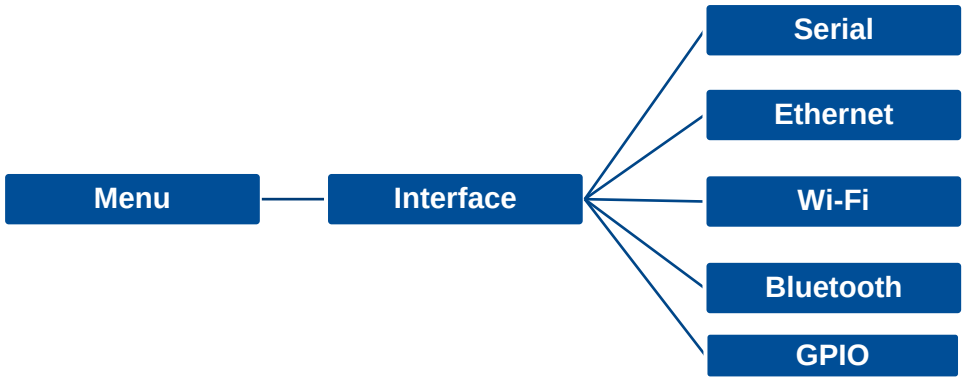

5.4.1 Serial Comm

Serial comm can set the printer RS-232 settings.

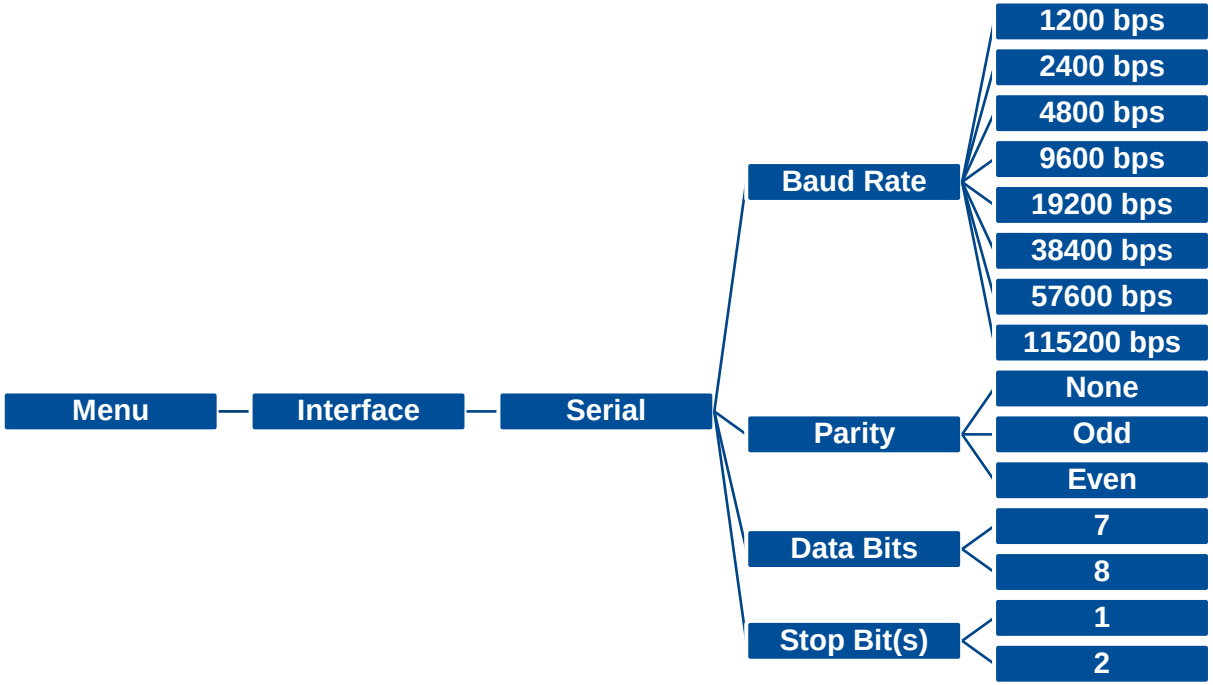

Item	Description	Default
Baud Rate	Set the RS-232 baud rate.	**9600**
Parity	Set the RS-232 parity.	**None**
Data Bits	Set the RS-232 Data Bits.	**8**
Stop Bit(s)	Set RS-232 Stop Bits.	**1**

5.4.2 Ethernet

Ethernet configures internal Ethernet configuration and checks the printer's Ethernet module status, and reset the Ethernet module.

Item	Description	Default
Network Interface	Select the network interface by Wi-Fi or Ethernet.	**N/A**
Status	Check the Ethernet IP address and MAC setting status.	**N/A**
Configure	**DHCP:** On or OFF the DHCP (Dynamic Host Configuration Protocol) network protocol. **Static IP:** Use this menu to set the printer's IP address, subnet mask and gateway.	**DHCP**

5.4.3 Wi-Fi

Wi-Fi can set the printer Wi-Fi settings.

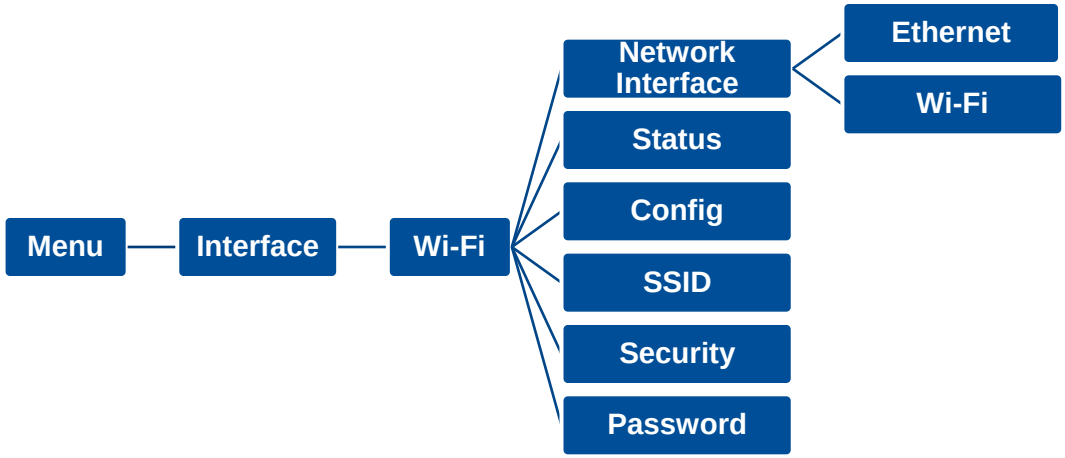

Item	Description	Default
Network Interface	Select the network interface by Wi-Fi or Ethernet.	**N/A**
Status	Check the Wi-Fi IP address, MAC setting status,…etc.	**N/A**
Config.	**DHCP:** ON/OFF the DHCP (Dynamic Host Configuration Protocol) network protocol. **Static IP:** Set the printer's IP address, subnet mask and gateway.	**DHCP**
SSID	Set Wi-Fi SSID.	**N/A**
Security	Set Wi-Fi security.	**Open**
Password	Set Wi-Fi password.	**N/A**

5.4.4 Bluetooth

Bluetooth can set the printer Bluetooth settings.

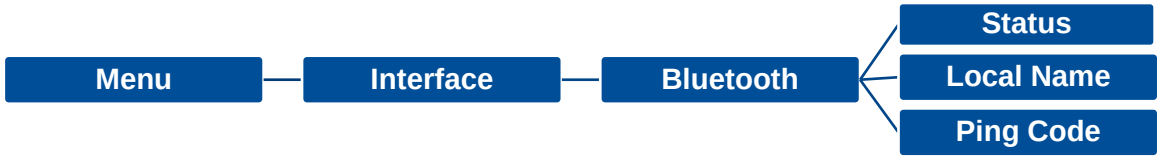

Item	Description	Default
Status	Check the Bluetooth status.	**N/A**
Local Name	Set the local name for Bluetooth.	**RF-BHS**
Ping Code	Set the local ping code for Bluetooth.	

5.4.5 GPIO

This option is used to set the print engine GPIO settings. (Applicator interface with DB15F connector +5V I/O)

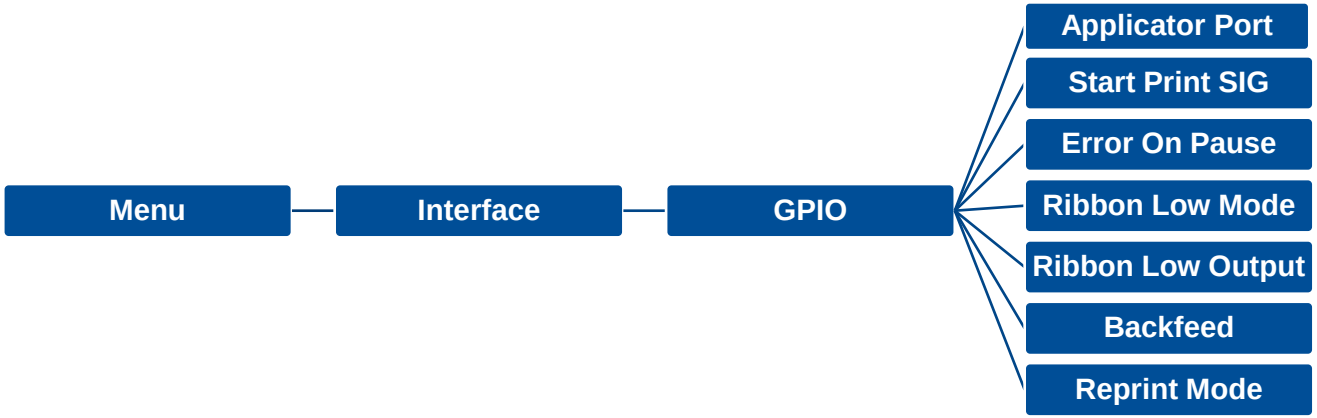

Item	Description	Default
Applicator Port	This option is used to set the GPO_3 signal when PRINT END.	**Off**

Selections	Description
Off	The applicator port is off.
Mode 1	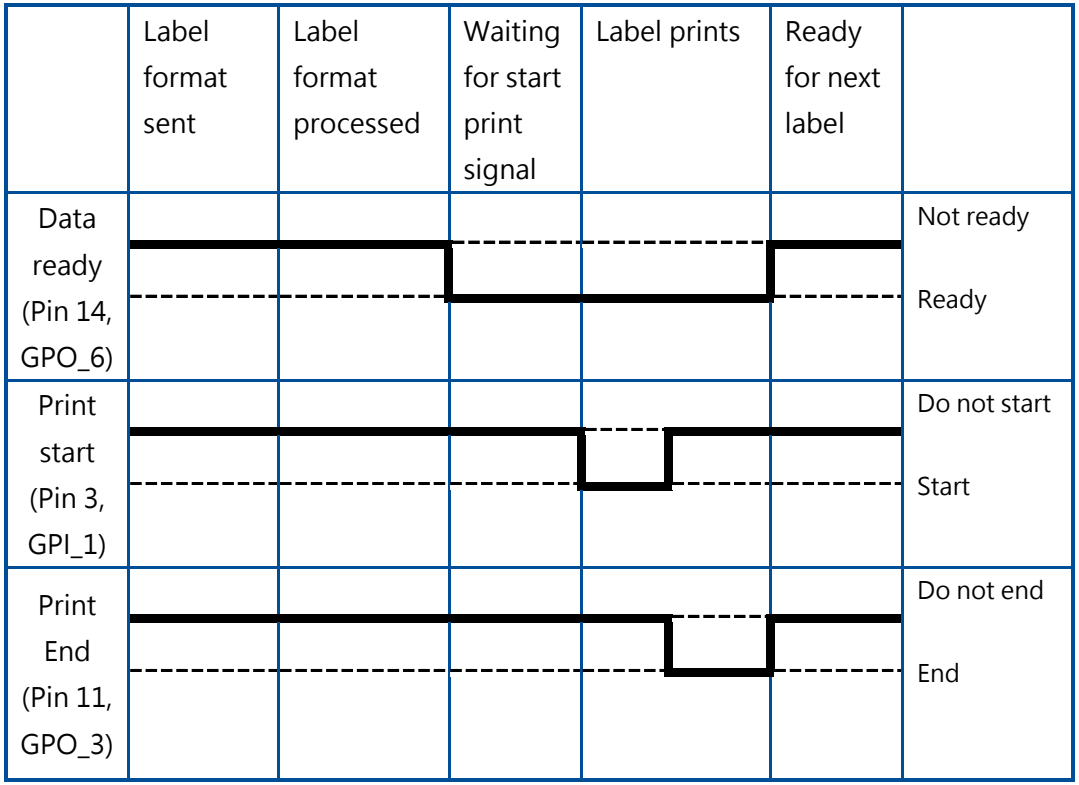

Mode 2

	Label format sent	Label format processed	Waiting for start print signal	Label prints	Ready for next label	
Data ready (Pin 14, GPO_6)						Not ready Ready
Print start (Pin 3, GPI_1)						Do not start Start
Print End (Pin 11, GPO_3)						Do not end End

Mode 3

	Label format sent	Label format processed	Waiting for start print signal	Label prints	Ready for next label	
Data ready (Pin 14, GPO_6)						Not ready Ready
Print start (Pin 3, GPI_1)						Do not start Start
Print End (Pin 11, GPO_3)						Do not end End

Mode 4

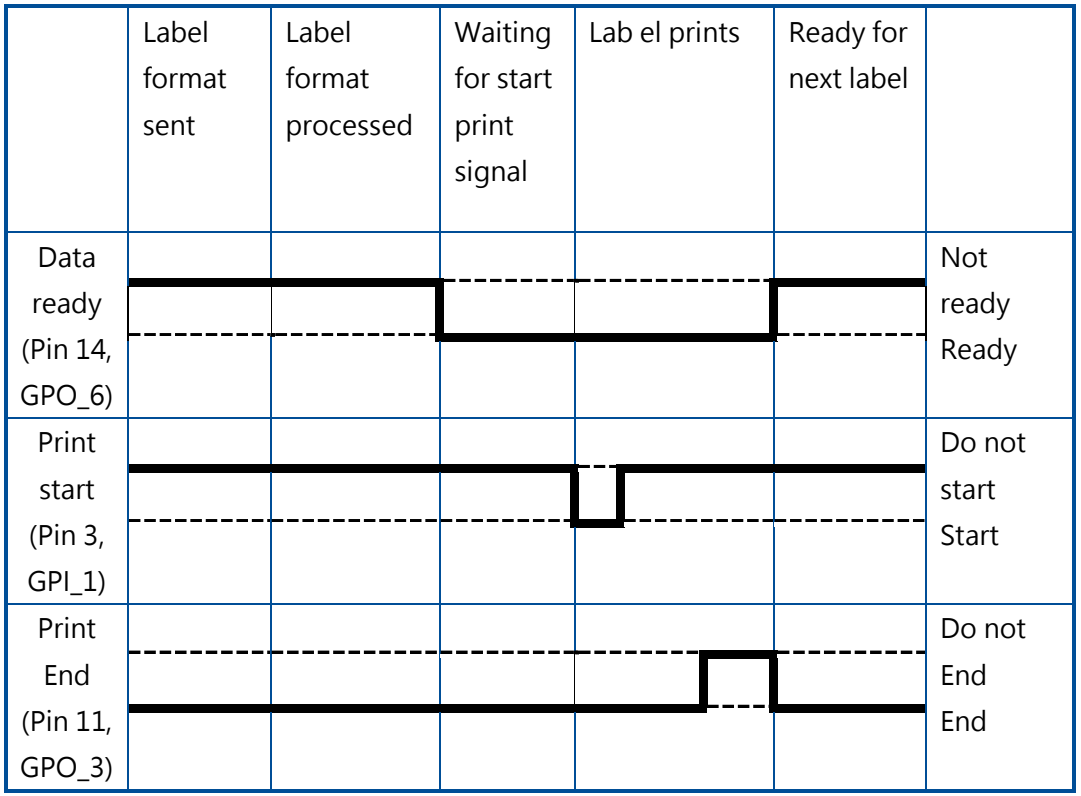

Customized

Use GPIO setting commands for customized settings. For GPIO command, please refer to TSPL/TSPL2 programming manual.

Start Print SIG	This determines the trigger conditions for the printer to control GPI 1 and GPI4.	**Level mode**
Error On Pause	When this option is enabled and the printer is paused, the error signal (GPO_2) is LOW.	**Enable**
Ribbon Low Mode	When this option is enabled and the printer is Low Ribbon (GPO_1), the printer will generate a warning.	**Enable**
Ribbon Low Output	When the Ribbon Low Mode feature is enabled, this parameter determines if the output signal on Pin 9 (GPO_1) is HIGH or LOW.	**Active High**
Backfeed	This determines the timing of pullback.	**Default**
Reprint Mode	When this option is disabled, the printer reprint function (GPI_4) will be invalid.	**Disable**

5.4.6 GPIO-DB25 (Option/ Available on EZS Version firmware)

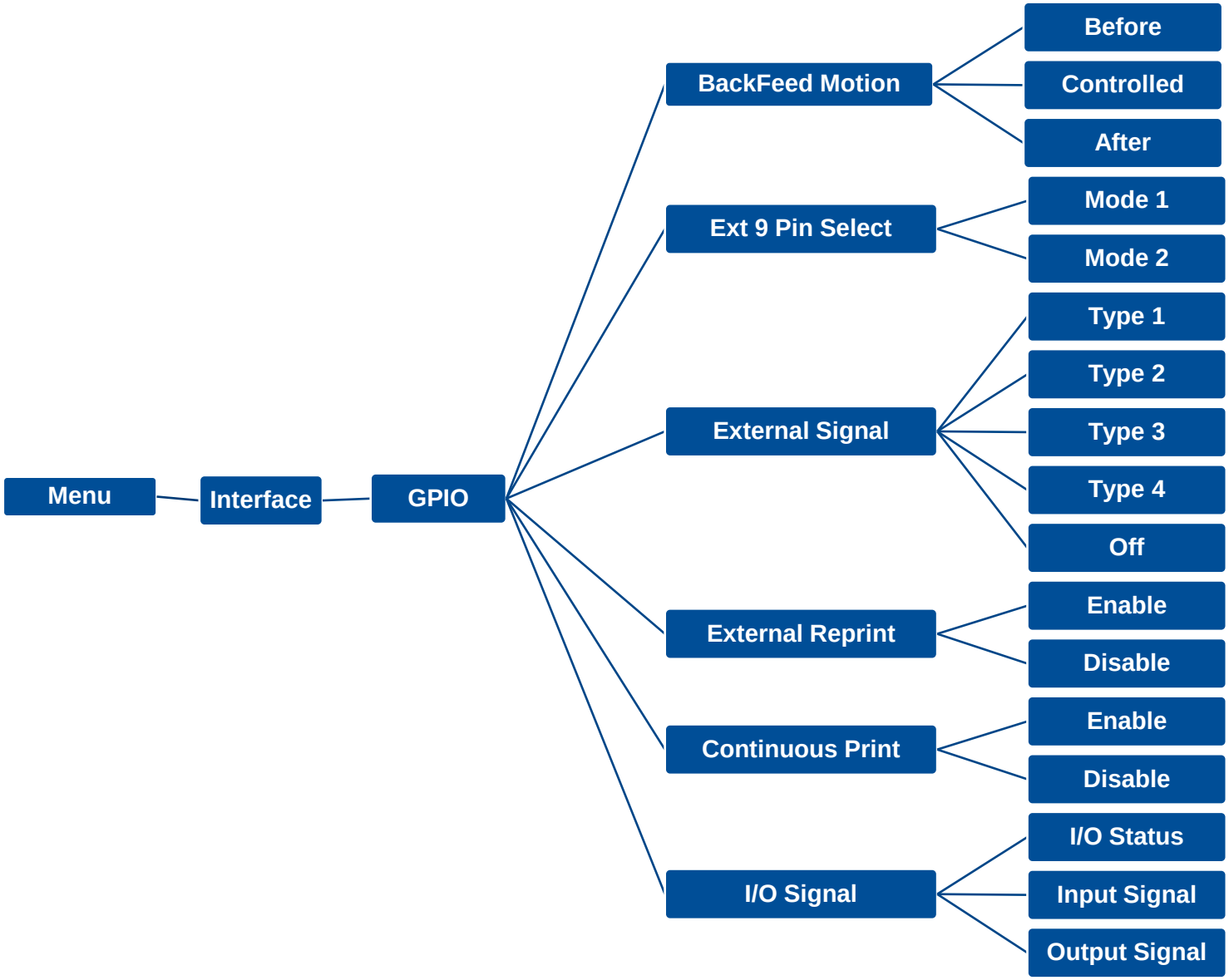

Item	Description	Default
BackFeed Motion	Set the Backfeed motion in dispenser mode **BEFORE**: Backfeed the media to the printhead position before printing **AFTER**: Backfeed the label after dispensing **CONTROLED**: Backfeed motion will be controlled by external signal	**Before**
Ext 9 Pin Select	Set the output mode of the external signal pin 6 when using a 25-pin connector **MODE1**: Outputs the signal when the product has/does not have remaining print data. **MODE2**: Outputs the signal if the product is in online or offline mode. (offline Is ERROR status)	**Mode 1**
External Signal	Enable or disable the external signal function OFF: Disable the external signal function **TYPE 1**: The **Print End signal** is **High** before label printing, and it becomes Low after print completion. The signal level becomes High after 20 msec. **TYPE 2**: The **Print End signal** is **Low** before label printing, and it becomes High after print completion. The signal level becomes Low after 20 msec. **TYPE 3:** The **Print End signal** is **High** before label printing, and it becomes Low from the start to the end of print, and it becomes High again after print completion **TYPE 4**: The **Print End signal** is **Low** before label printing, and it becomes High from the start to the end of print, and it becomes Low again after print completion	**Off**

Type 1,2

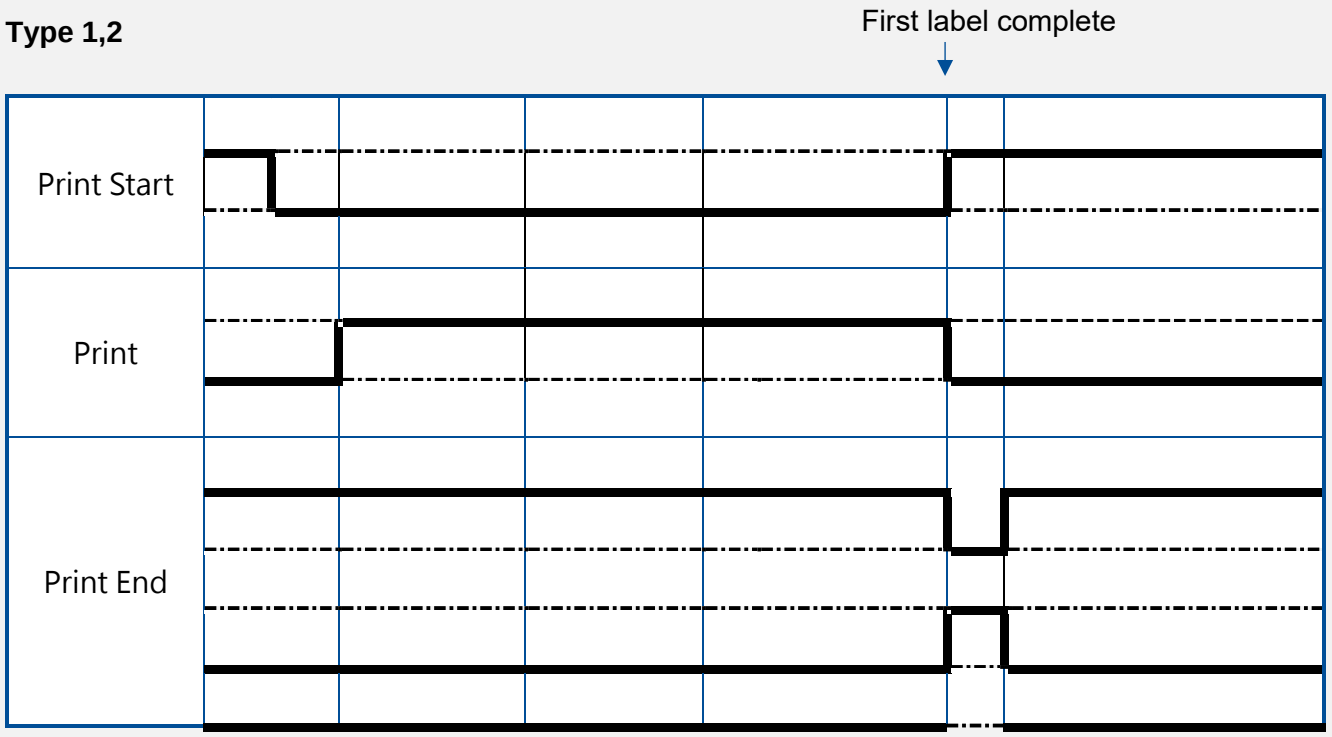

Type 3,4

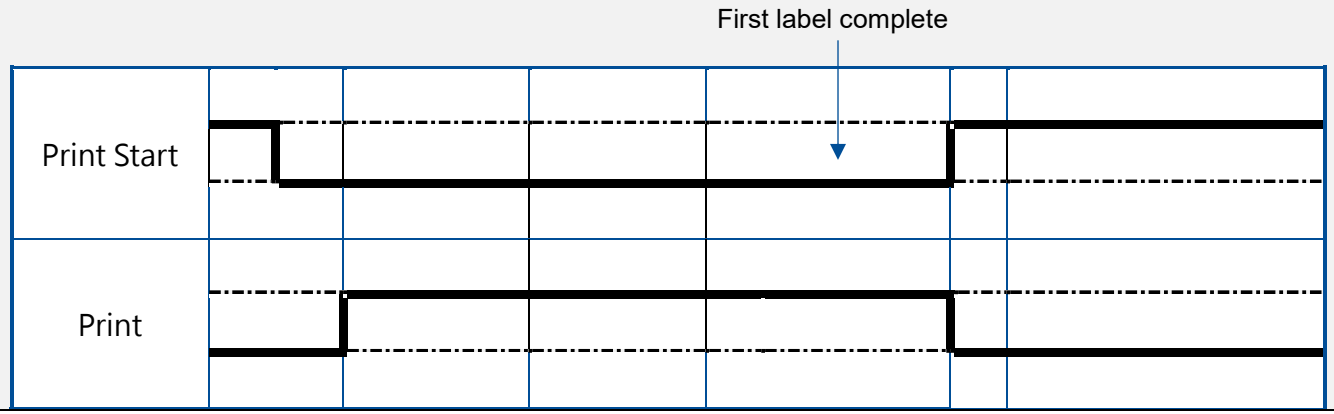

	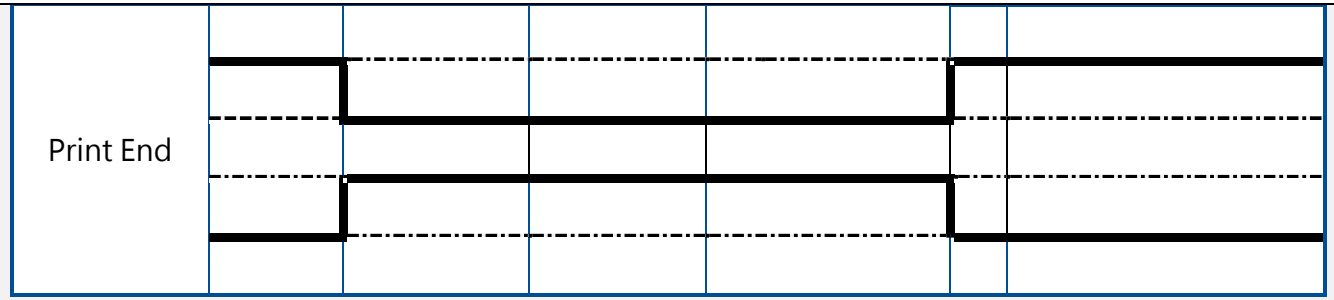	
External Reprint	Use external signal to trigger the reprint signal to access reprint function **ENABLE**: Enable the reprint **DISABLE**: Disable the reprint	**Disable**
Continuous Print	Use external signal to trigger the Print start signal to access reprint function **ENABLE:** Enable the continuous print **DISABLE:** Disable the continuous print	**Disable**
I/O Signal	Check the I/O Signal status and set the input and output pin settings Input signal: Set the Print Start Pin Output signal: Set the Print End Pin	**-**

5.4.7 RFID (Option)

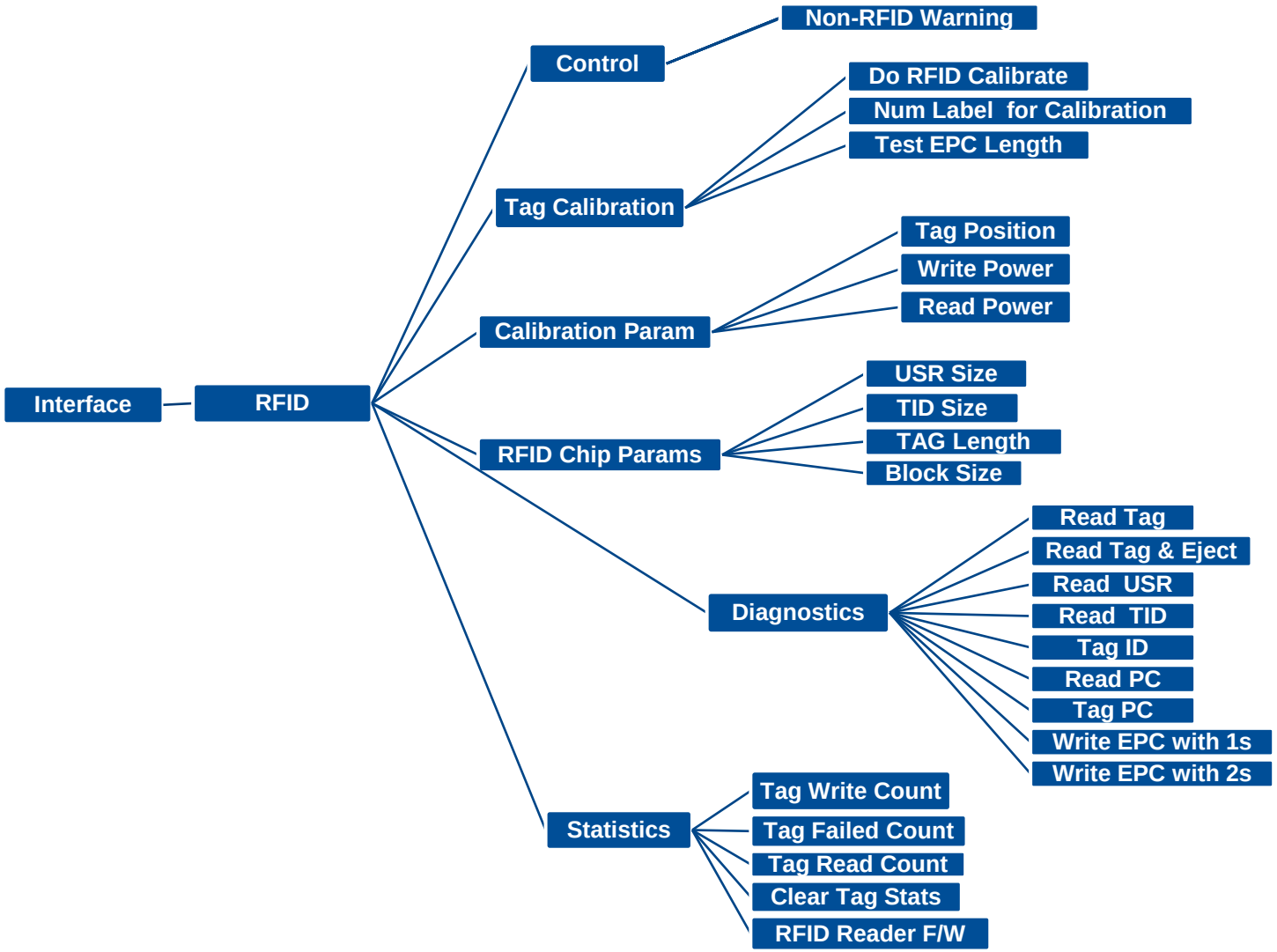

<table>
<tr><th colspan="2">Item</th><th>Description</th><th>Default</th></tr>
<tr><td rowspan="5">Wi-Fi</td><td>Status</td><td>Check the Wi-Fi status</td><td>N/A</td></tr>
<tr><td>Configure</td><td>Set the Wi-Fi configure</td><td>DHCP</td></tr>
<tr><td>SSID</td><td>Set the SSID</td><td>N/A</td></tr>
<tr><td>Security</td><td>Set the security</td><td>Open</td></tr>
<tr><td>Password</td><td>Set the security key</td><td>N/A</td></tr>
<tr><td rowspan="2">Bluetooth</td><td>Status</td><td>Check the Bluetooth status</td><td>N/A</td></tr>
<tr><td>Local Name</td><td>Set the local name for Bluetooth</td><td>N/A</td></tr>
<tr><td>RFID</td><td>Control</td><td>
RFID Active:
Select ON/OFF to enable/disable the RFID encoder module.

Error Handling:
This menu item selects the error handling mode for RFID failures.
<table>
<tr><td>Overstrike (Default)</td><td>Each failed label prints with the Overstrike pattern and the form retries on a new label until the Label Retry count is exhausted. Whether or not an error message will display or the failed label will reprint depends upon the Max Retry Error setting.</td></tr>
<tr><td>None</td><td>No specific action is taken when a tag fails to be programmed.</td></tr>
<tr><td>Stop</td><td>The printer will halt and display the error message “RFID Error: Check Media.” The label is discarded and reprinting of the label (if desired) must be initiated from the host. When the error is cleared, the label with the failed tag moves forward until the next label is in position to be printed.</td></tr>
</table>

Label Retry:
This menu item selects the number of label retries that the RFID encoder will attempt before declaring a fault. This may indicate a problem with the RFID encoder, the coupler assembly, the printer setup, or the label stock.
<table>
<tr><td>Minimum</td><td>1</td></tr>
<tr><td>Maximum</td><td>10 (Default)</td></tr>
</table>

Max Retry Error:
This menu item determines if errors are declared when the Label Retry count is exceeded.

EPC Write Ctrl:
This option controls how the printer encodes the RFID tag EPC field.

Non-RFID Warning:
This menu item enables a warning to appear if the printer receives a print job that does not contain any RFID commands when RFID media is installed in the printer.
</td><td></td></tr>
</table>

<table>
<tr>
<td rowspan="2">RFID</td>
<td>Tag Calibration</td>
<td>This submenu is used to do RFID calibration. The user must do the tag calibration when installing a new tag in the printer. RFID calibration operation determines the RFID chip type, the write/read power, program position, length of the EPC/User field.
<table>
<tr><td>Do RFID Calibrate</td><td>The executable item performs RFID calibration.
This item should be executed when changing the RFID tag type.

Note: Before performing an RFID calibration, you will first need to select the right sensor for your RFID labels and run a media sensor calibration. Please refer to the section “RFID Calibration” for more information.</td></tr>
<tr><td>Num Label for Calibration</td><td>The menu item determines how many tags to use for calibration. However, this value does not include tags moved when seeking gaps during the calibration process. Depending on the difficulty in calibrating the installed tags, the number of labels used could be more or less, but generally, the larger number chosen in this menu, the more tags that will be averaged together to determine the calibration result. Usually, this value should be left at the default value.
<table>
<tr><td>Minimum</td><td>3 (Default)</td></tr>
<tr><td>Maximum</td><td>7</td></tr>
</table></td></tr>
<tr><td>Test EPC Length</td><td>The menu item determines the size of the EPC data that will be used to perform the RFID Calibration. This menu can be increased to improve the accuracy of the RFID Calibration, but it should not be increased to a value greater than the maximum EPC length that the current Tag Type can support.
<table>
<tr><td>Minimum</td><td>16</td></tr>
<tr><td>Maximum</td><td>256</td></tr>
<tr><td>Default</td><td>96</td></tr>
</table></td></tr>
</table></td>
<td></td>
</tr>
<tr>
<td>Calibration Param</td>
<td>It will contain the settings used for optimal tag encoding. These parameters can be obtained automatically through RFID Calibration.
<table>
<tr><td>Tag Position</td><td>This menu determines how far the RFID tag encoding position of the currently installed tag should be offset from Top of Form.</td></tr>
<tr><td>Write Power</td><td>This menu item selects the write power level to be used in the RFID encoder. Normally, this value is set automatically by the RFID calibration process and should not be changed.
<table>
<tr><td>Minimum</td><td>1</td></tr>
<tr><td>Maximum</td><td>25</td></tr>
</table></td></tr>
<tr><td>Read Power</td><td>This menu item selects the read power level to be used in the RFID encoder. Normally, this value is set automatically by the RFID calibration process and should not be changed.
<table>
<tr><td>Minimum</td><td>1</td></tr>
<tr><td>Maximum</td><td>25</td></tr>
</table></td></tr>
</table></td>
<td></td>
</tr>
</table>

<table>
<tr>
<td>RFID</td>
<td>RFID Chip Param</td>
<td>
It is used to configure the system when support of custom RFID tags is required.
<table>
<tr>
<td>USR Size</td>
<td>This menu item selects the size in bytes of the USR block within the RFID tag memory. Normally, this value is set automatically by the RFID calibration process and should not be changed.
<table>
<tr><td>Minimum</td><td>0 (Default)</td></tr>
<tr><td>Maximum</td><td>256</td></tr>
</table>
Note: This value will be hidden if Higgs3 tags are detected, and the Higgs 3 USR Len menu will be unhidden instead.</td>
</tr>
<tr>
<td>TID Size</td>
<td>This menu item indicates the size of the memory block within the RFID tag memory that contains the Tag ID. Normally, this value is set automatically by the RFID calibration process and should not be changed.
<table>
<tr><td>Minimum</td><td>0</td></tr>
<tr><td>Maximum</td><td>12</td></tr>
<tr><td>Default</td><td>8</td></tr>
</table></td>
</tr>
<tr>
<td>Higgs 3 USR Len</td>
<td>Higgs 3 tags differ from other RFID tags in that its memory bank size is not fixed. To accommodate EPC lengths longer than 96 bits, Higgs 3 borrows memory from the USR bank. This display only menu indicates the size in bits of the USR block within the RFID tag memory.
<table>
<tr><td>Minimum</td><td>128</td></tr>
<tr><td>Maximum</td><td>512 (Default)</td></tr>
</table>
Note:
This menu will only be shown if a Higgs 3 tag is detected. Otherwise, it will be hidden.</td>
</tr>
<tr>
<td>Higgs 3 EPC Len</td>
<td>Higgs 3 tags differ from other RFID tags in that its memory bank size is not fixed. To accommodate EPC lengths longer than 96 bits, Higgs 3 borrows memory from the USR bank. This menu item selects the number of bits dedicated to the EPC block within the RFID tag memory.
<table>
<tr><td>Minimum</td><td>96</td></tr>
<tr><td>Maximum</td><td>480</td></tr>
<tr><td>Default</td><td>96</td></tr>
</table>
Note:
This menu will only be shown if a Higgs 3 tag is detected. Otherwise, it will be hidden.</td>
</tr>
<tr>
<td>TAG Length</td>
<td>This menu item selects the number of bytes in the EPC block within the RFID tag memory. Normally, this value is set automatically by the RFID calibration process and should not be changed.
<table>
<tr><td>Minimum</td><td>8</td></tr>
<tr><td>Maximum</td><td>64</td></tr>
<tr><td>Default</td><td>12</td></tr>
</table>
Note:
This value will be hidden if Higgs3 tags are detected, and the Higgs 3 EPC Len menu will be unhidden instead.</td>
</tr>
</table>
</td>
<td></td>
</tr>
</table>

		Block Size	This menu item selects the maximum number of bytes written to the USR block within the RFID tag memory at one time. Normally, this value is set automatically by the RFID calibration process and should not be changed. Minimum: 0 Maximum: 32 Default: 8
	Diagnostics	It is used to run test procedures to help determine the accuracy and troubleshoot the RFID system.	
		Read Tag	This executable menu reads the tag in range of the internal RFID coupler and reports the tag data to the debug port and momentarily displays it on the control panel's LCD. It is primarily intended for development verification by checking that the system is working. **Note:** **This menu item does not position the RFID tag over the coupler. Make sure to position the tag over the coupler to receive an accurate reading.**
		Read Tag & Eject	This executable menu works exactly the same as *Read Tag* executable, except that after the printer reads the tag, it feeds the label to the next top-of-form. **Note:** **This menu item does not position the RFID tag over the coupler. Make sure to position the tag over the coupler to receive an accurate reading.**
		Read USR	This executable menu reads the User Memory bank of the tag in range of the internal RFID coupler and reports the data to the debug port and momentarily displays it on the control panel's LCD. It is primarily intended for development verification by checking that the system is working. **Note:** **This menu item does not position the RFID tag over the coupler. Make sure to position the tag over the coupler to receive an accurate reading.**
		Read TID	This executable menu reads the TID (Tag ID) from the tag in range of the internal RFID coupler and displays the value read in the *Tag ID* menu. **Note:** **This menu item does not position the RFID tag over the coupler. Make sure to position the tag over the coupler to receive an accurate reading.**
		Tag ID	This menu item displays the first TID (Tag ID) read since power-up, or if using the *Read TID* menu, the most recently read TID. If no tag is in range of the internal RFID coupler, "Unknown" displays.
		Read PC	This executable menu reads the PC (Protocol Control) field from an RFID tag in range of the internal RFID coupler and displays the value read in the Tag PC menu. **Note:** **This menu item does not position the RFID tag over the coupler. Make sure to position the tag over the coupler to receive an accurate reading.**
		Tag PC	This menu item displays the last PC (Protocol Control) field read from an RFID tag. If no tag is in range of the internal RFID coupler, "Unknown" displays.
		Write EPC with 1s	This executable menu writes all ones to the tag in range of the internal RFID coupler. It is primarily intended for development verification by checking that the system is working. **Note:**

		This menu item does not position the RFID tag over the coupler. Make sure to position the tag over the coupler to receive an accurate writing.	
		Write EPC with 2s — This executable menu writes all twos to the tag in range of the internal RFID coupler. It is primarily intended for development verification by checking that the system is working. **Note:** **This menu item does not position the RFID tag over the coupler. Make sure to position the tag over the coupler to receive an accurate writing.**	
	Statistics	It is general read-only and used to gather and report statistics on how the RFID system is reporting on print jobs sent to the printer.	
		Tag Write Count — This menu item displays on the LCD the number of tags attempted to be written since the last ***Clear Tag Stat*** operation has been initiated.	
		Tag Failed Count — This menu item displays on the LCD the number of failed RFID tags since the last ***Clear Tag Stat*** operation has been initiated.	
		Tag Read Count — This menu item displays the number of tags read since the last ***Clear Tag Stat*** operation.	
		Clear Tag Stat — This executable menu item clears the Count menu items in this submenu.	
		RFID Reader F/W — Shows the RFID firmware version installed in the encoder.	
		RFID Reader Hd/W — Shows the RFID hardware version installed in the encoder.	

5.5 Advanced

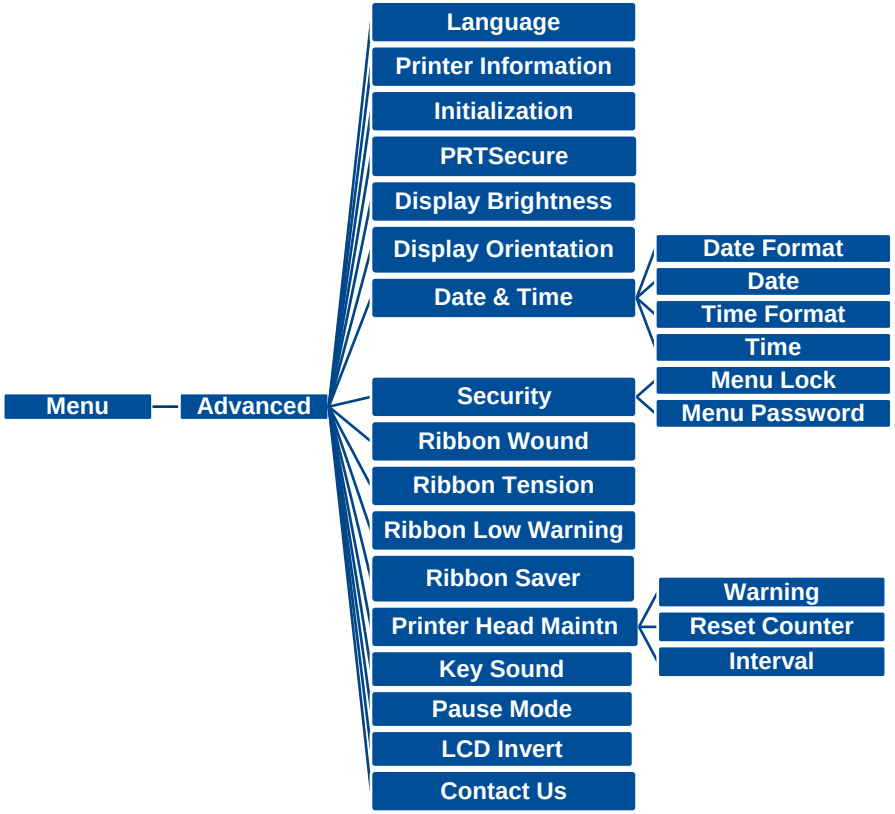

Item	Description	Default
Language	Switch the language on display.	**English**
Printer Information	Check the printer's serial number, printed mileage (m), printed labels (pcs) and cutting counter.	**N/A**
Initialization	Restore printer settings to defaults.	**N/A**

Item	Description	Default
PRTSecure	Configures the **PRTSecure** function. • **Strict:** When selected, network setup and network configuration via network is blocked. • **Standard:** When selected, network setup and network configuration is allowed. If you want to connect to network under **Strict Mode**, please refer to TSC Network Security Manual for more details. Alternatively, you can also scan the QR code below to access the manual.	**Strict** (network blocked for units shipped to the EU.)
Display Brightness	Set the brightness for display. Range: 0 - 100.	**50**
Display Orientation	Sets the display's orientation. Options: 0 / 180	**0**
Date & Time	Setup the date and time on display.	**N/A**
Security	Set the password for locking the menu or favorites. The default password is 8888.	**Disable**
Ribbon Wound	Set the ribbon wound direction.	**Ink Side Out**
Ribbon Tension	Set the ribbon tension. **Note:** **Select the ribbon tension according to the ribbon width,** **Low for 2-inch ribbon, Medium for 4-inch ribbon, and High for 6-inch ribbon.**	**Medium**
Ribbon Low Warning	Set the warning for ribbon low. For example, if setting value is 30m, when ribbon capacity was lower than 30m, the will be shown in red.	**30M**
Ribbon Saver	Enables the Ribbon Saver Mode.	**Disable**

Item	Description	Default
Printer Head Maintn	Check printhead status and to set the settings for printhead care. **Warning**: Enable/disable the printhead clean warning. If enable this feature, once printhead has been reached the setting mileage then the warning icon will be shown on printer UI for reminding user to clean the printhead. The default setting is disable. **Reset Counter**: Reset the printhead clean warning mileage after cleaning printhead. **Interval:** This item is used to set the expected mileage for reminding user to clean the printhead. You have to enable the “TPH warning lock” for use. The default setting is 1 km.	**N/A**
Key Sound	This item is used to enable/disable the sound of front panel buttons.	**ON**
Pause Mode	This item is used to enable/disable the printer into pause mode (Off line). After selecting “enable”, press the down arrow key and the printer will pause all actions.	**Disable**
LCD Invert	Depending on the printer orientation, the display can be set to 0° (standard) or 180°. (Yes/ No)	**NO**
Contact Us	Check the contact information for tech support service.	**N/A**

5.6 File Manager

File Manager is used to check the printer available memory, show the files list, delete the files or run the files that saved in the printer DRAM/Flash/Card memory.

Item	Description
DRAM	Use this menu to show, delete and run (.BAS) the files saved in the printer DRAM memory.
FLASH	Use this menu to show, delete and run (.BAS) the files saved in the printer Flash memory.
CARD	Use this menu to show, delete and run (.BAS) the files saved in the SD card on printer. **Note: This subsection will only be visible when the SD card installed.**

5.7 Diagnostic

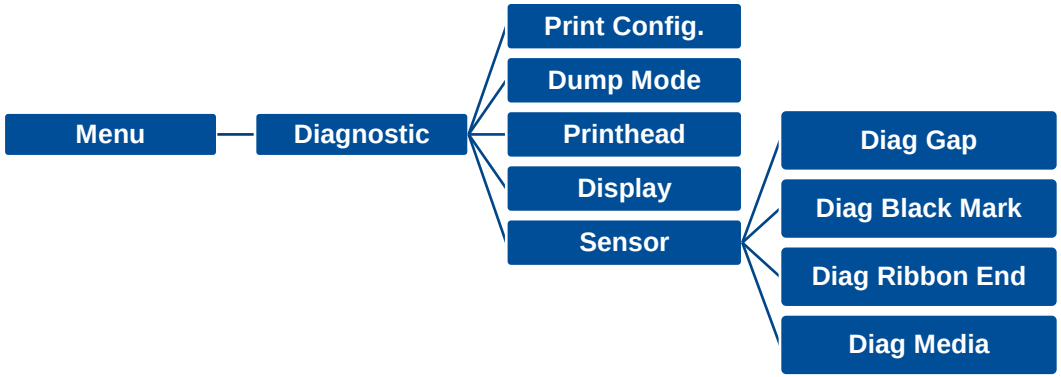

Item	Description
Print Config.	Print current printer configuration to the label. The configuration printout contains printhead test pattern, which is useful for checking the dot damage on the printhead heater.
Dump Mode	Captures the data from the communications port and prints out the data received by printer. In the dump mode, all characters will be printed in 2 columns. The left side characters are received from your system and right side data are the corresponding hexadecimal value of the characters. It allows users or engineers to verify and debug the program. **Dump mode requires 4" width paper.**
Printhead	Check printhead's temperature and bad dots.
Display	Check LCD's color state.
Sensor	Check sensors intensity and reading state.

5.8 Favorites

This feature can create customized menu list. You can organize the commonly used setting options to the Favorites list.

Enter Favorites List

1. Press and hold the left side soft key on Ready mode to enter **Favorites**. (Default: No items in the list)

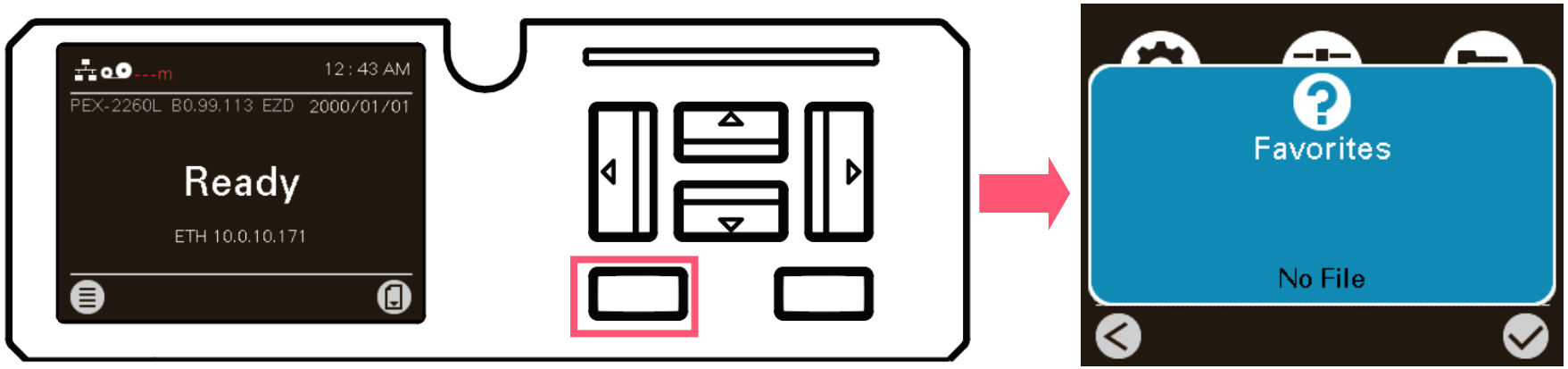

Press and hold left soft keys

Add List to Favorite

1. Select one option item, and press and hold the right soft key until **Join Favorites** window pops up. Select “Yes” to add the item to Favorites list.

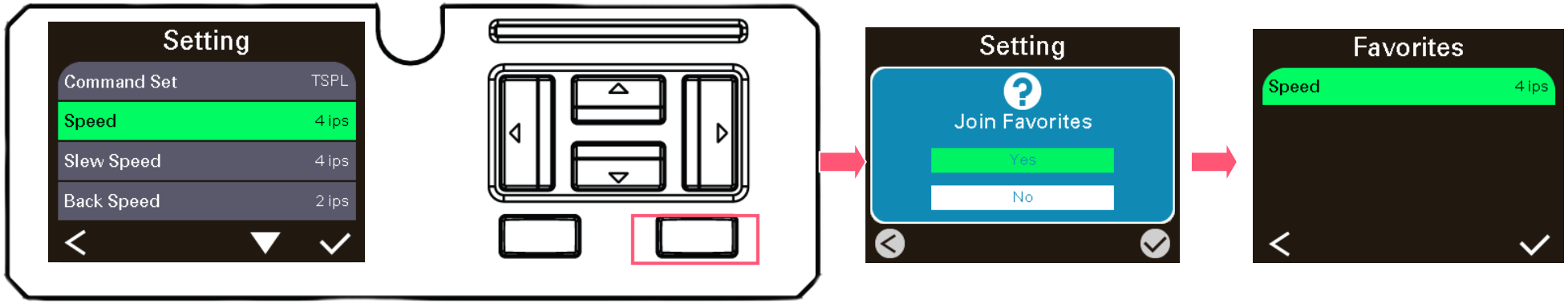

Press and hold the right soft key

Delete Items From Favorite

2. Select one option item, and press and hold the right soft key until **Delete Favorites** window pops up. Select “Yes” to remove the item from Favorites list.

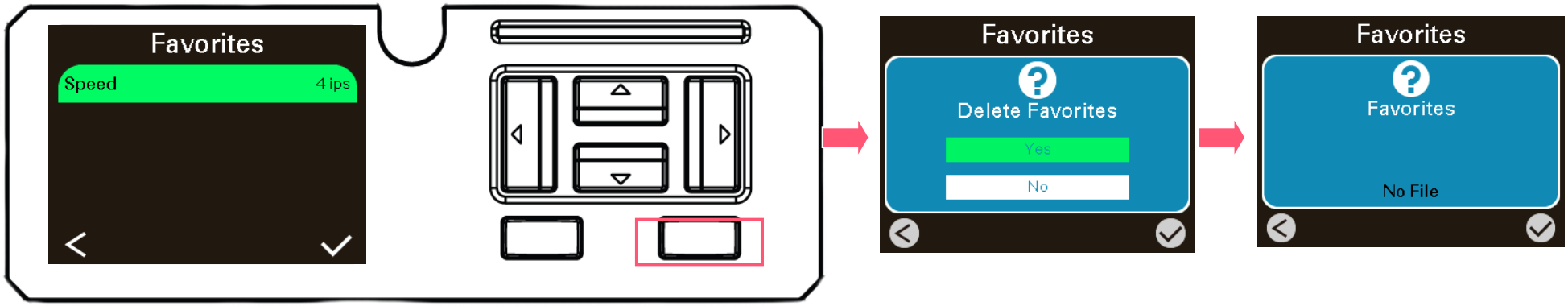

Press and hold the right soft key

6 Command Settings

6.1 SET GPO

Description

Use this command to send out the GPIO signals by the printer.

Syntax

SET GPOn signal state, delay0, pulse0, delay1, pulse1, function condition

<table>
<tr><th>Parameter</th><th>Description</th></tr>
<tr><td>n</td><td>n = 1 - 7
Seven dedicated outputs are available for the desired function conditions.</td></tr>
<tr><td>Signal state</td><td><table><tr><td>HIGH</td><td>Goes the high level signal when the following function condition is detected.</td></tr><tr><td>LOW</td><td>Goes the low level signal when the following function condition is detected.</td></tr><tr><td>POS</td><td>Goes the positive pulse signal when the following function condition is detected.</td></tr><tr><td>NEG</td><td>Goes the negative pulse signal when the following function condition is detected.</td></tr></table></td></tr>
<tr><td>Delay0</td><td>After detecting the following function condition, the printer will wait this period of time before sending out the “true” output signal.
Unit: millisecond. Maximum: 32000.</td></tr>
<tr><td>Pulse0</td><td>Pulse width corresponding to the function condition becoming “true”. (Ignored for level-type signals.)
Unit: millisecond. Maximum: 32000.</td></tr>
<tr><td>Delay1</td><td>After detecting the following function condition, the printer will wait this period of time before sending out the “false” output signal.
Unit: millisecond. Maximum: 32000.</td></tr>
</table>

Pulse1	Pulse width corresponding to the function condition becoming “false”. (Ignored for level-type signals.) Unit: millisecond. Maximum: 32000.
Function condition (warning, error, control…)	

FAULT	Printer fault.
FAULT RIBBON	Ribbon error is occurred.
FAULT PAPER	Paper empty or paper jam is occurred.
FAULT CARRIAGE	Carriage is open.
FAULT MEMORY	Out of memory is occurred.
FAULT CUTTER	Cutter error is occurred.
FAULT OVERHEAT	Stepping motor or printhead is over heat.
PAUSE	Pause status is occurred.
TAKELABEL	Take label is occurred.
IDLE	Printer is idle.
PRINT	Printer is printing.

Sample Code

Example

```
SET GPO1 HIGH,100,0,100,0,FAULT RIBBON
SET GPO2 LOW,100,0,100,0,FAULT PAPER
SET GPO3 POS,100,100,100,100,PAUSE
SET GPO4 NEG,100,50,100,50,IDLE
```

6.2 SET GPI

Description

Use this command to receive the GPIO signals from external controlling devices.

Syntax

SET GPIn signal, pulse, function

<table>
<tr><th>Parameter</th><th>Description</th></tr>
<tr><td>n</td><td>n = 1 - 4
Four dedicated inputs are available for the desired control functions.</td></tr>
<tr><td>Signal state</td><td><table>
<tr><td>HIGH</td><td>When a high level signal received, will activate the following printer control functions.</td></tr>
<tr><td>LOW</td><td>When a low level signal received, will activate the following printer control functions.</td></tr>
<tr><td>POS</td><td>When a positive pulse signal received, will activate the following printer control functions.</td></tr>
<tr><td>NEG</td><td>When a negative pulse signal received, will activate the following printer control functions.</td></tr>
</table></td></tr>
<tr><td>Pulse</td><td>Filter pulse width. Ignored for level-type signals.
Unit: millisecond. Maximum: 32000.</td></tr>
<tr><td>Function
(control)</td><td><table>
<tr><td>PAUSE</td><td>Toggle pause status.</td></tr>
<tr><td>PAUSE ON</td><td>Enter pause status.</td></tr>
<tr><td>PAUSE OFF</td><td>Cancel pause status.</td></tr>
<tr><td>PRINT</td><td>Print batch of labels.</td></tr>
<tr><td>PRINT n</td><td>n is numerical. Specify how many labels to print. Maximum: 32000.</td></tr>
<tr><td>CUT</td><td>Cut immediately.</td></tr>
<tr><td>FEED n</td><td>n is numerical and the unit is dot. Specify the feeding length. Maximum: 32000.</td></tr>
<tr><td>BACKFEED n</td><td>n is numerical and the unit is dot. Specify the backfeed length. Maximum: 32000.</td></tr>
<tr><td>FORMFEED</td><td>Feeding an empty label.</td></tr>
<tr><td>INPUT n</td><td>n is text or command. The n will be triggered to printer.</td></tr>
</table></td></tr>
</table>

Sample Code

Example
SET GPI1 HIGH,0,PAUSE SET GPI2 LOW,0,PAUSE ON SET GPI3 POS,100,PAUSE OFF SET GPI4 NEG,100,CUT
SET GPI1 NEG,100,INPUT “TEST.BAS”+CHR$(13)+CHR$(10)

GPIO Waveform

GPI Level Signal : Continuous action. (Host to printer.)

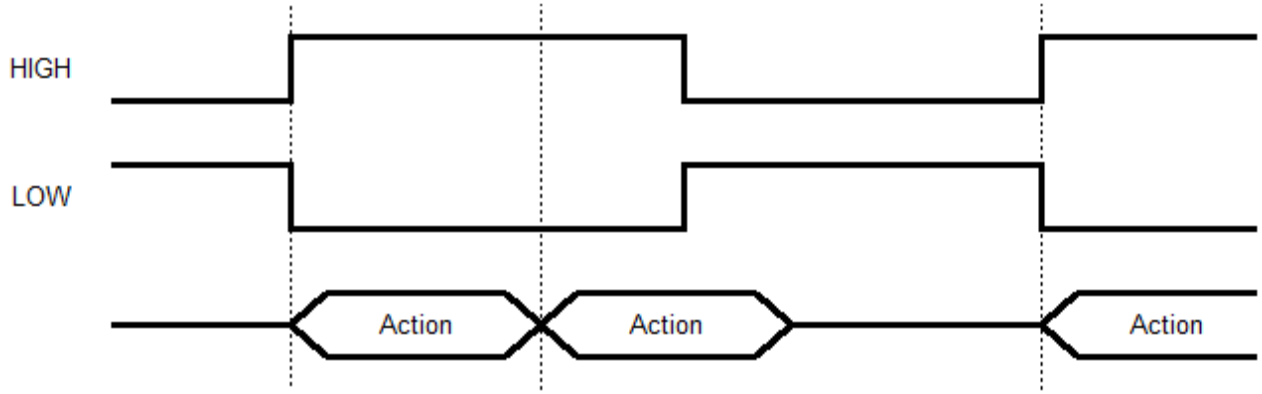

GPI Pulse Signal : A pulse is an action. (Host to printer.)

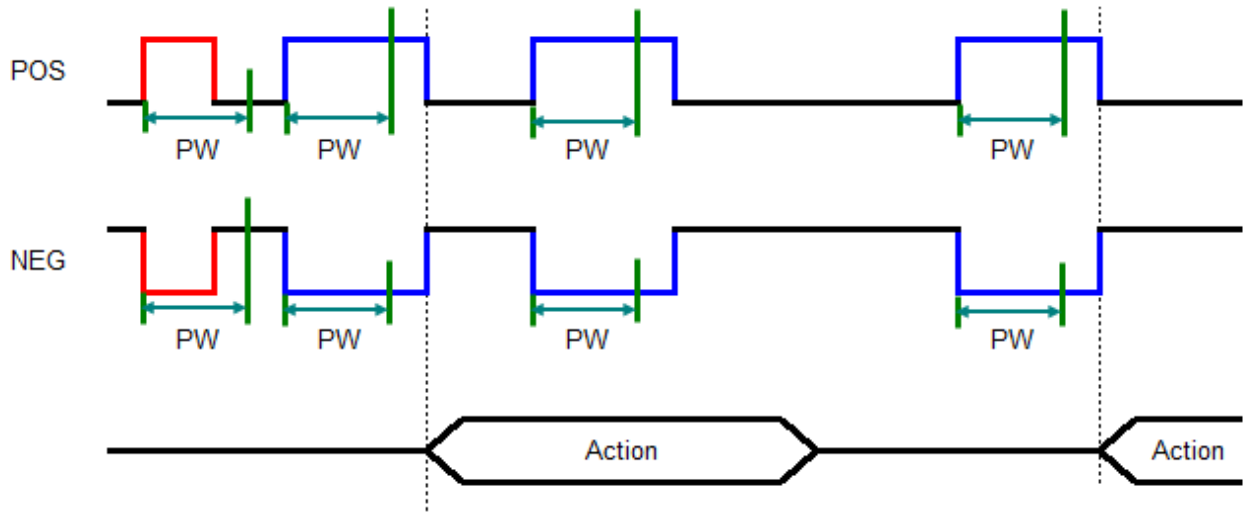

GPO Level Signal : Continuous condition. (Printer to host.)

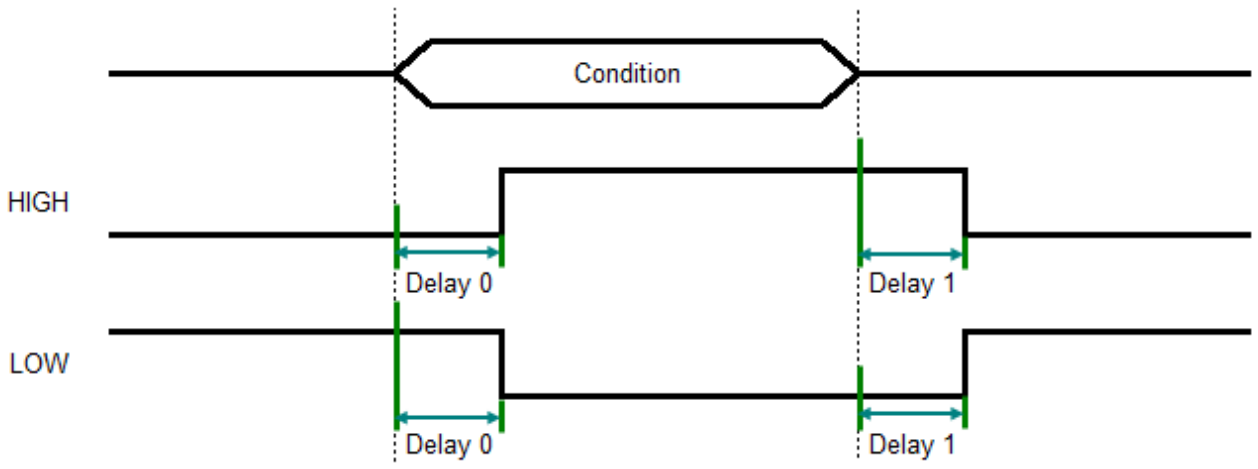

GPO Pulse Signal : A pulse is a condition. (Printer to host.)

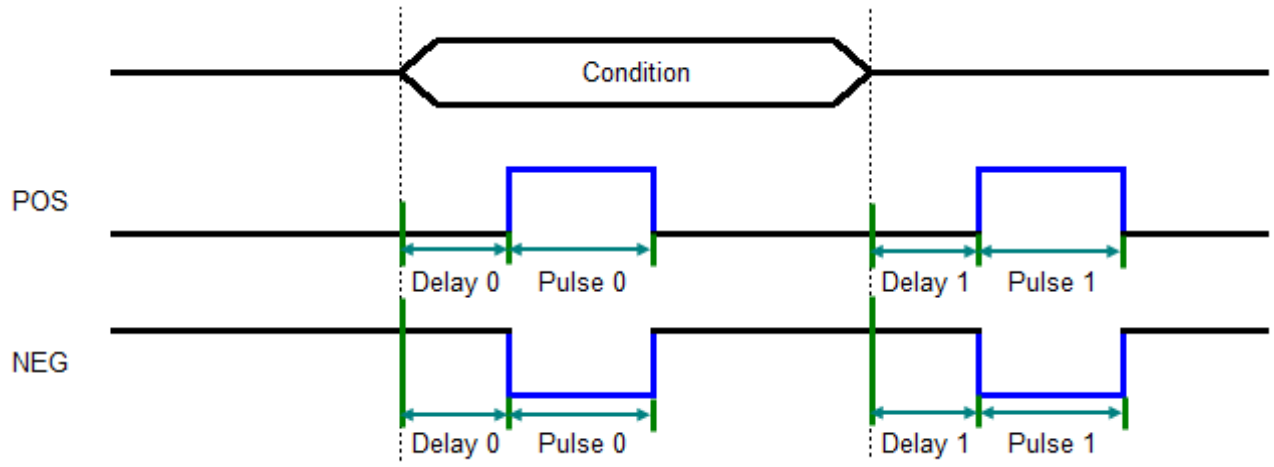

GPO pin no. 1 - 7 application example:

Since we connect GPO pin no. 1 - 7 with seven individual LED, the output signal from GPO will light the individual LED on or off.

*NPN output specification.

Collector-emitter voltage	V_{CEO}	35 V
Emitter-collector voltage	V_{CEO}	6 V
Collector current	I_C	Max. 50 mA
*1 Collector power dissipation	P_C	150 mW

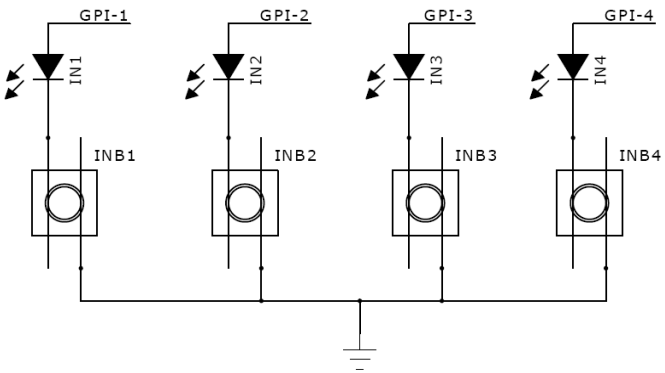

GPI pin no. 1 - 4 application example:

Since we connect GPI pin no. 1 - 4 with four individual button keys to control the desired printer functions. The input signal current suggests 20 mA.

6.3 Applicator I/O Interface (DB15F) Circuit Diagram

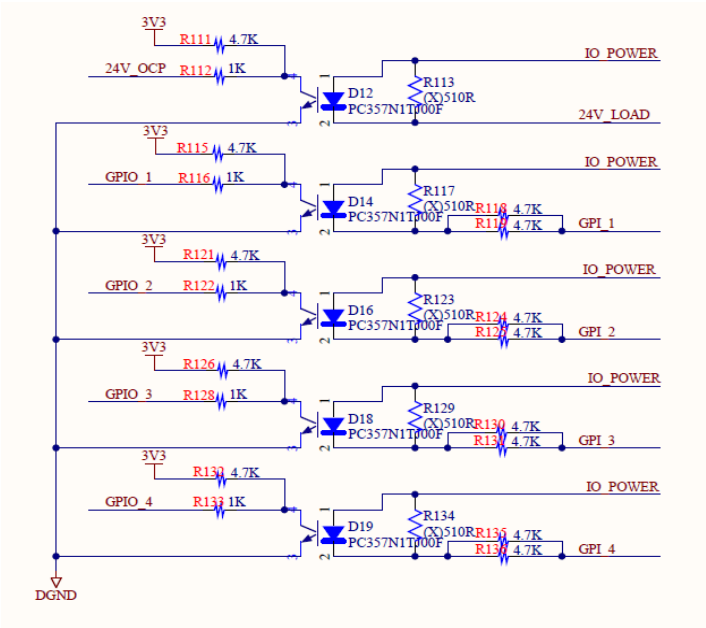

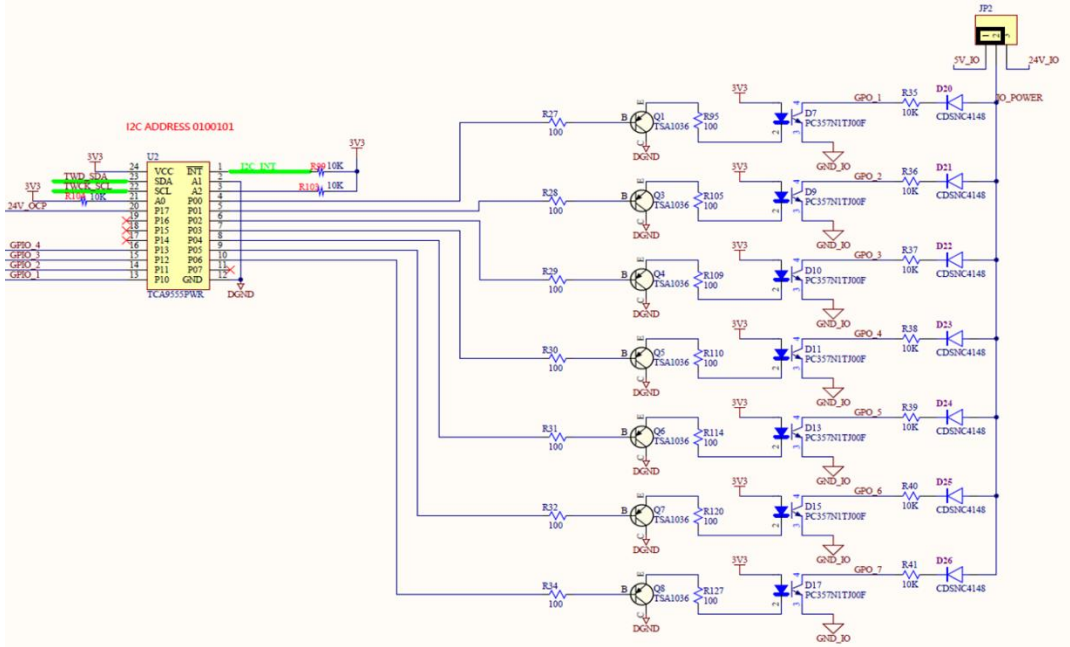

PEX-1000 series

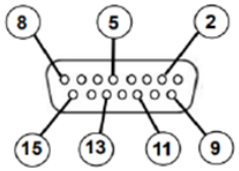

PIN	CONFIGURATION	SIGNAL NAME	SIGNAL TYPE
1	GND	I/O SIGNAL GROUND	I/O Signal Ground
2	5V(JP2 short)	I/O SIGNAL POWER	Power
3	GPI_1	PRINT START	Input
4	GPI_2	FORMFEED	Input
5	GPI_3	PAUSE	Input
6	GPI_4	REPRINT	Input
7	24V	(+) 24V	Power
8	GND	GROUND	Power Ground
9	GPO_1	LOWRIBBON	Output
10	GPO_2	FAULT	Output
11	GPO_3	PRINT END	Output
12	GPO_4	FAULT PAPER	Output
13	GPO_5	FAULT RIBBON	Output
14	GPO_6	DATA READY	Output
15	GPO_7	Dummy	Output

6.4 Applicator I/O Interface (DB25F) Circuit Diagram (optional)

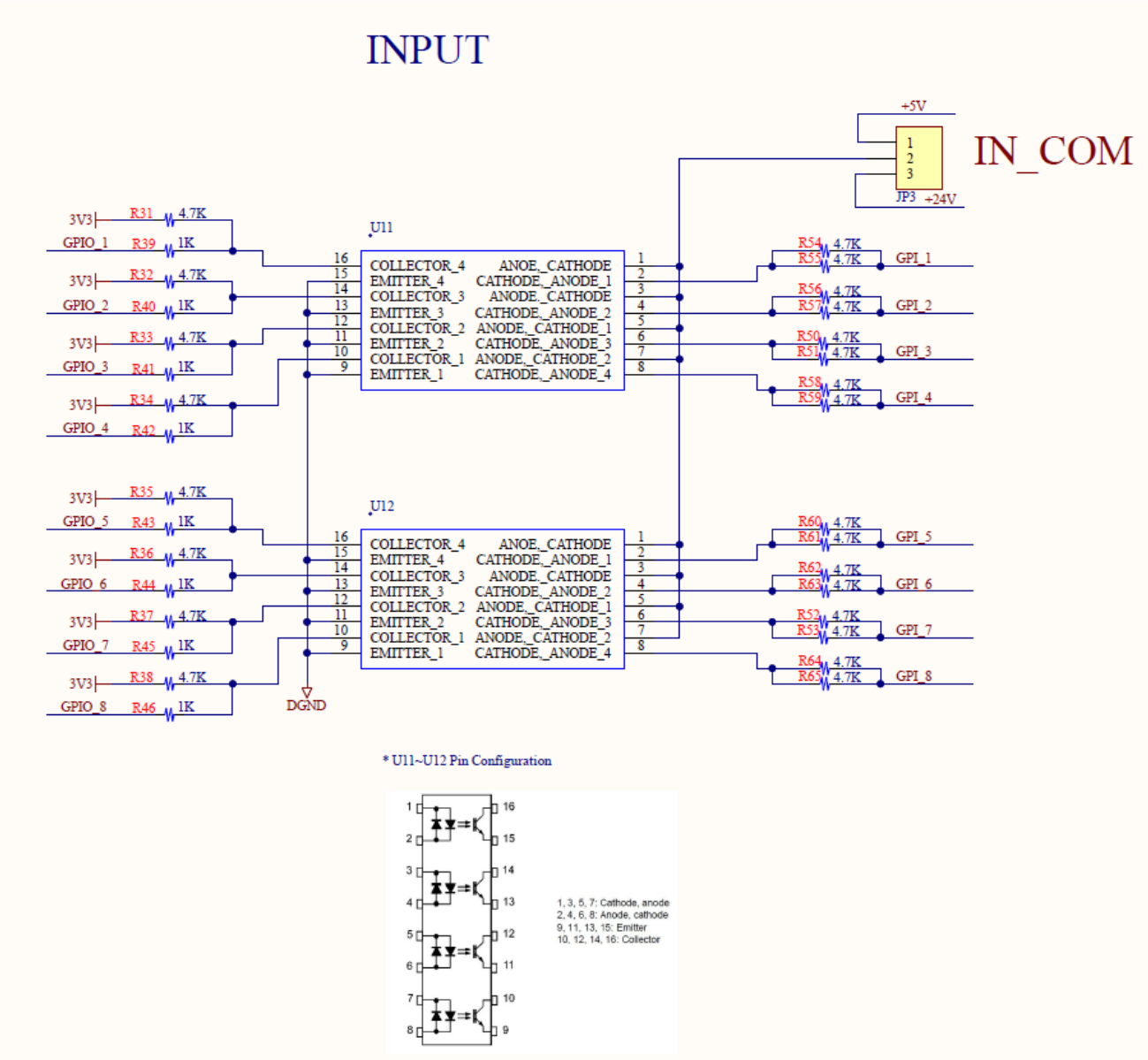

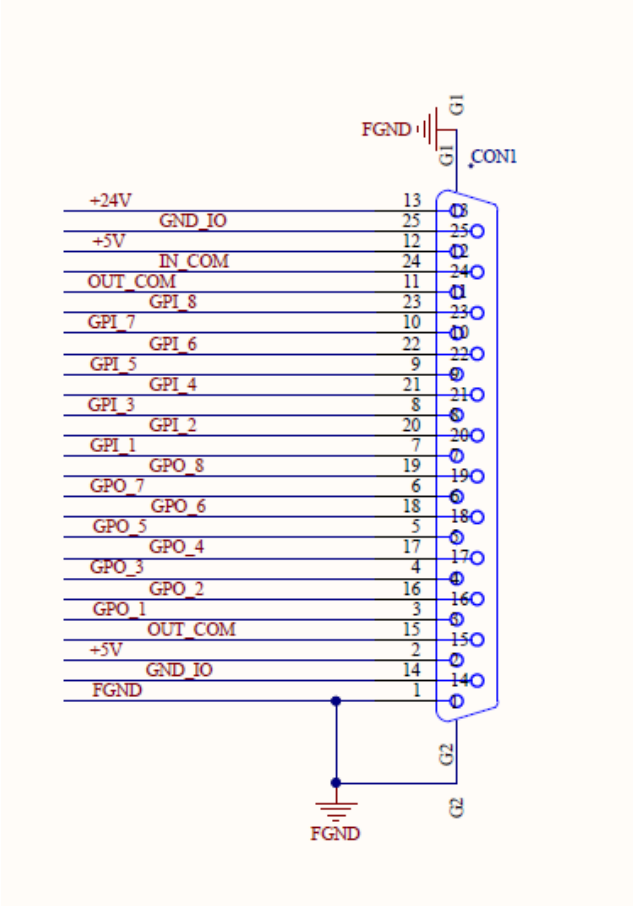

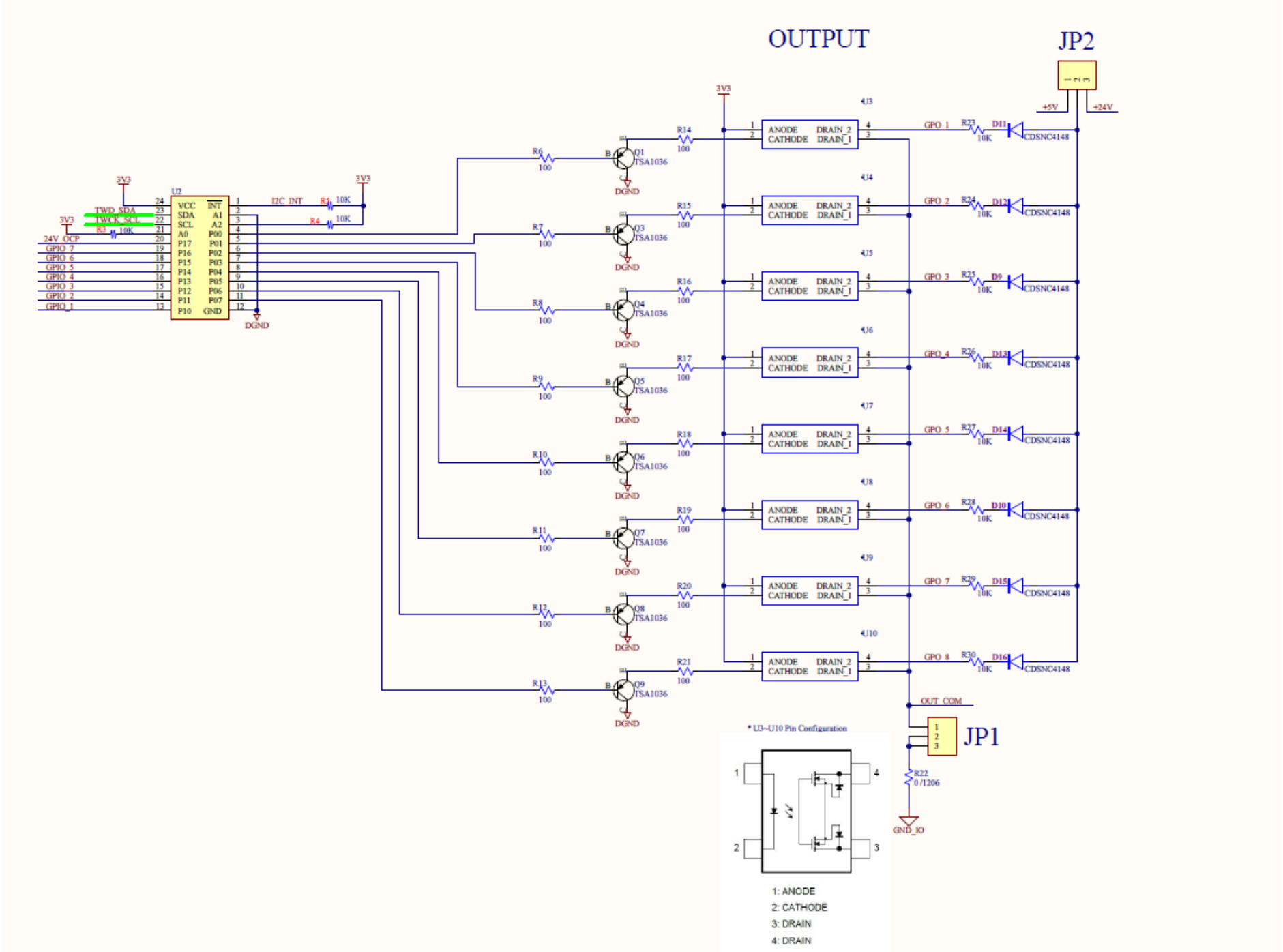
OUTPUT
JP2
+5V
+24V
3V3
U2
VCC
SDA
SCL
A0
P17
P16
P15
P14
P13
P12
P11
P10
INT
A1
A2
P00
P01
P02
P03
P04
P05
P06
P07
GND
TWD_SDA
TWCK_SCL
24V_OCP
GPIO_7
GPIO_6
GPIO_5
GPIO_4
GPIO_3
GPIO_2
GPIO_1
I2C_INT
R1 10K
R2 10K
R3 10K
R4 10K
DGND
R6 100
R7 100
R8 100
R9 100
R10 100
R11 100
R12 100
R13 100
Q1 TSA1036
Q3 TSA1036
Q4 TSA1036
Q5 TSA1036
Q6 TSA1036
Q7 TSA1036
Q8 TSA1036
Q9 TSA1036
R14 100
R15 100
R16 100
R17 100
R18 100
R19 100
R20 100
R21 100
U3
U4
U5
U6
U7
U8
U9
U10
ANODE
CATHODE
DRAIN_2
DRAIN_1
GPO_1
GPO_2
GPO_3
GPO_4
GPO_5
GPO_6
GPO_7
GPO_8
R23 10K
R24 10K
R25 10K
R26 10K
R27 10K
R28 10K
R29 10K
R30 10K
D11 CDSNC4148
D12 CDSNC4148
D9 CDSNC4148
D13 CDSNC4148
D14 CDSNC4148
D10 CDSNC4148
D15 CDSNC4148
D16 CDSNC4148
OUT_COM
JP1
R22 0/1206
GND_IO
* U3~U10 Pin Configuration
1: ANODE
2: CATHODE
3: DRAIN
4: DRAIN

Below table's emulation will only be applied when users are using GPIO-DB25 with the **External Signal** function **turned on(Type 1/2/3/4).**

Please follow the procedures to trun on the function: **Menu > Interface > GPIO > External Signal (Defualt:Off) > Type1/2/3/4.**

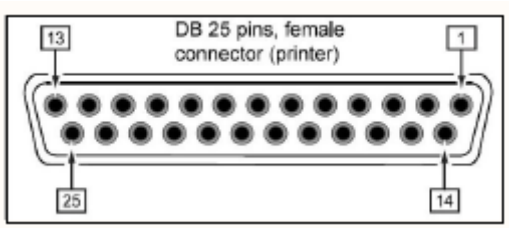

Pin	CONFIGURATION	SIGNAL NAME	SIGNAL TYPE	LEVEL
1	FGND	FG (Frame Ground)	-	-
2	+5V	+5V	-	-
3	GPO_1	Start Print	Output	Low
4	GPO_3	Machine Error	Output	Low
5	GPO_5	Print Completed	Output	Low
6	GPO_7	Online	Output	Low
7	GPI_1	Label Near End	Input	Low
8	GPI_3	Reprint	Input	Low
9	GPI_5	Backfeed Order	Input	Low
10	GPI_7	Reverse	Input	-
11	OUT_COM	OUT_COM	-	-
12	+5V	+5V	-	-
13	+24V	+24V	-	-
14	GND	GND(Signal Ground)	-	-
15	OUT_COM	OUT_COM		-
16	GPO_2	Fault Ribbon	Output	Low
17	GPO_4	Fault Paper	Output	Low

18	GPO_6	Low Ribbon	Output	High
19	GPO_8	Reverse	Output	-
20	GPI_2	Start Print	Input	Low
21	GPI_4	Formfeed	Input	Low
22	GPI_6	Reverse	Input	-
23	GPI_8	Reverse	Input	-
24	IN_COM	IN_COM	Input	-
25	GND	GND(SIGNAL GROND)	-	-

7 Troubleshooting

7.1 Common Problems

Problem	Possible Cause	Recovery Procedure
Power indicator does not illuminate	* The power cord is not properly connected.	* Plug the power cord in print engine and outlet. * Switch the power on.
Carriage Open	* The printhead carriages are open.	* Please close the print carriages.
Not Printing	* Check if interface cable is well connected to the interface connector. * Check if wireless or Bluetooth device is well connected between host and print engine. * The port specified in the Windows driver is not correct.	* Re-connect cable to interface or change a new cable. * Please reset the wireless device setting. * Select the correct print port in the driver. * Clean the printhead. * Printhead's harness connector is not well connected with printhead. Turn off the power and plug the connector again. * Check your program if there is a command PRINT at the end of the file and there must have CRLF at the end of each command line.
No print on the label	* Label or ribbon is loaded not correctly. * Use wrong type paper or ribbon	* Follow the instructions in loading the media and ribbon. * Ribbon and media are not compatible. * Verify the ribbon-inked side. * The print density setting is incorrect.
No Ribbon	* Running out of ribbon. * The ribbon is installed incorrectly.	* Supply a new ribbon roll. * Please refer to the steps in user's manual to reinstall the ribbon.
No Paper	* Running out of label. * The label is installed incorrectly. * Gap/black mark sensor is not calibrated.	* Supply a new label roll. * Please refer to the steps in user's manual to reinstall the label roll. * Calibrate the gap/black mark sensor.
Paper Jam	* Gap/black mark sensor is not set properly. * Make sure label size is set properly. * Labels may be stuck inside the print engine mechanism.	* Calibrate the media sensor. * Set media size correctly. * Remove the stuck label inside the print engine mechanism.
Can't downloading the file to memory (FLASH / CARD)	* The space of memory is full.	* Delete unused files in the memory.

SD card is unable to use	* SD card is damaged. * SD card doesn't insert correctly. * Use the non-approved SD card manufacturer.	* Use the supported capacity SD card. * Insert the SD card again.
Poor Print Quality	* Ribbon and media is loaded incorrectly * Dust or adhesive accumulation on the printhead. * Print density is not set properly. * Printhead element is damaged. * Ribbon and media are incompatible. * The printhead pressure is not set properly.	* Reload the supply. * Clean the printhead. * Clean the platen roller. * Adjust the print density and print speed. * Run self-test and check the printhead test pattern if there is dot missing in the pattern. * Change proper ribbon or proper label media. * Adjust the printhead pressure adjustment knob. * The release lever does not latch the printhead properly.
Missing printing on the left or right side of label	* Wrong label size setup.	* Set the correct label size.
Gray line on the blank label	* The printhead is dirty. * The platen roller is dirty.	* Clean the printhead. * Clean the platen roller.
Irregular printing	* The print engine is in Hex Dump mode. * The RS-232 setting is incorrect.	* Turn off and on the print engine to skip the dump mode. * Re-set the Rs-232 setting.
Label feeding is not stable (skew) when printing	* The media guide does not touch the edge of the media.	* If the label is moving to the right side, please move the label guide to left. * If the label is moving to the left side, please move the label guide to right.
Skip labels when printing	* Label size is not specified properly. * Sensor sensitivity is not set properly. * The media sensor is covered with dust.	* Check if label size is setup correctly. * Calibrate the sensor by Auto Gap or Manual Gap options. * Clear the GAP/Black mark sensor by blower.
Wrinkle Problem	* Printhead pressure is incorrect. * Ribbon installation is incorrect. * Media installation is incorrect. * Print density is incorrect. * Media feeding is incorrect.	* Please refer to the next chapter. * Please set the suitable density to have good print quality. * Make sure the label guide touch the edge of the media guide.
RTC time is incorrect when reboot the print engine	* The battery has run down.	* Check if there is a battery on the main board.

The left side printout position is incorrect	* Wrong label size setup. * The parameter Shift X in LCD menu is incorrect.	* Set the correct label size. * Press [MENU] → [SELECT] x 3 → [DOWN] x 5 → [SELECT] to fine tune the parameter of Shift X.
The printing position of small label is incorrect	* Media sensor sensitivity is not set properly. * Label size is incorrect. * The parameter Shift Y in the LCD menu is incorrect. * The vertical offset setting in the driver is incorrect.	* Calibrate the sensor sensitivity again. * Set the correct label size and gap size. * Enter LCD menu (or via TSC Console) to fine tune the parameter of Shift Y. * If using the software BarTender, please set the vertical offset in the driver. 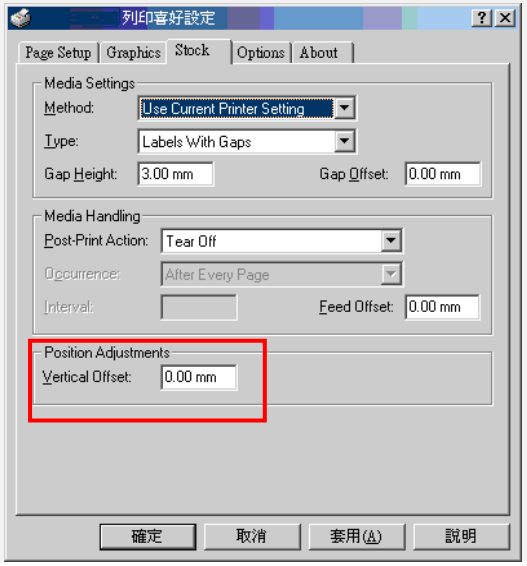

7.2 Printing Adjustments

7.2.1 Moveable Printhead Pressure Adjustment

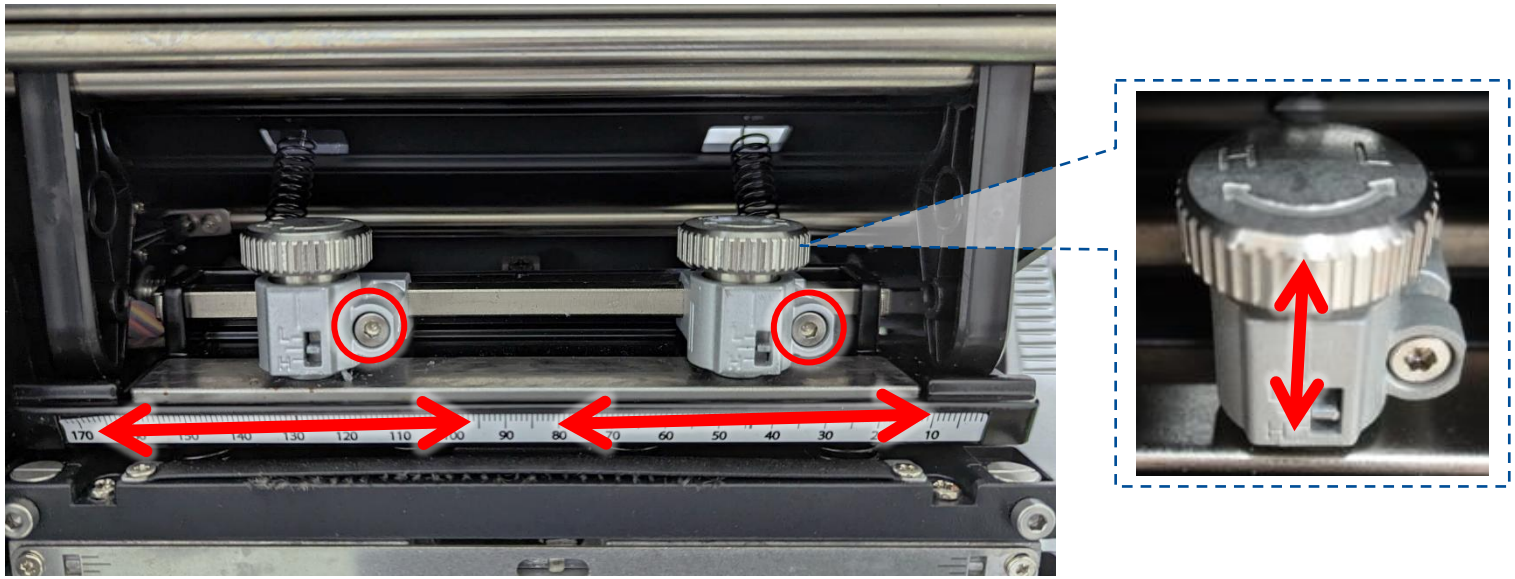

The **Moveable Printhead Pressure Adjustment** has High/Low pressure adjustment.
Because the printer's paper alignment is located on the inboard side of the mechanism, different media widths require different pressure to print correctly. As a result, adjustment of pressure knob may be required to get your best print quality.
There is one pressure knob for 4 inch series model and there are two pressure knobs for 6 inch series model.
Turn the knob to L (Decreasing pressure) or H (Increasing pressure) to adjust the printhead pressure.
Use 3 mm hex key to loosen the knob to adjust the printhead pressure position.
Continue to adjust the printhead pressure or position and test print as necessary until the printed image is clear. After adjustment, tighten the screw.

7.2.2 Ribbon Tension Adjustment

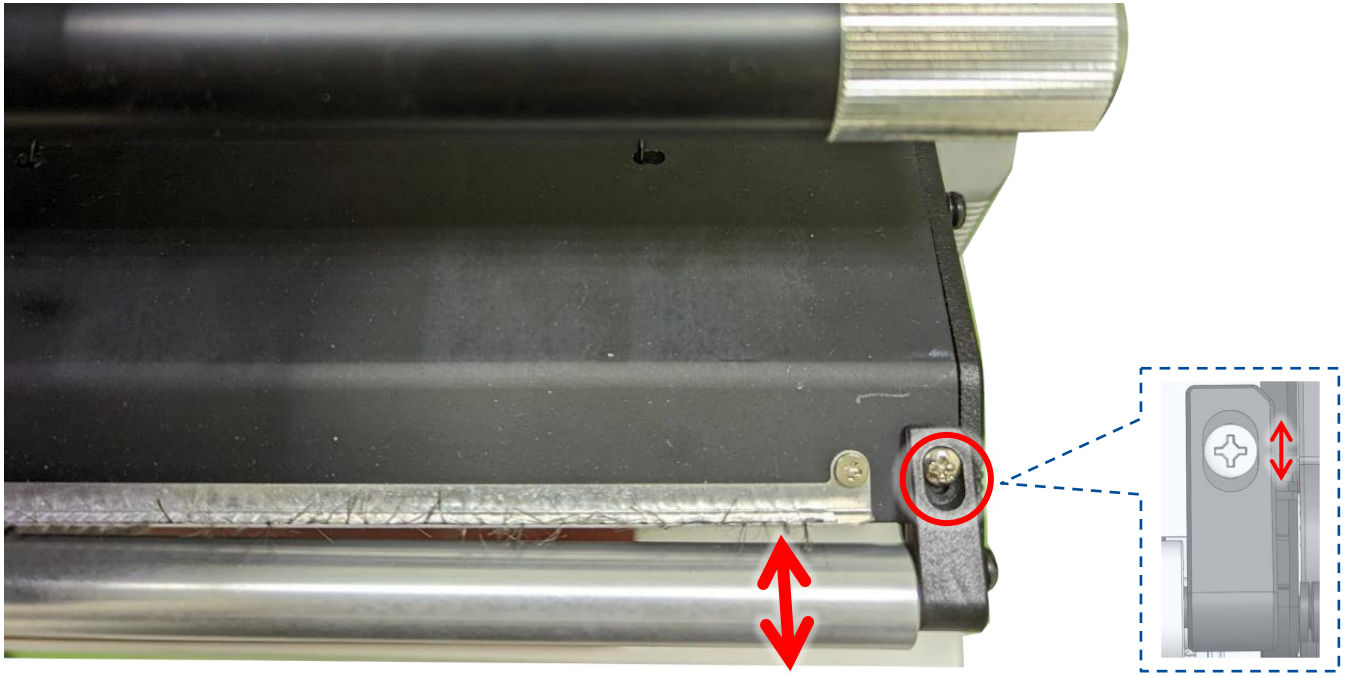

The **Ribbon Tension Adjustment** can adjust the ribbon tension level.
Because the ribbon is aligned to the inward side of the printer mechanism, different ribbon or media widths may require different ribbon tension to print correctly. Therefore, it may be necessary to adjust the ribbon tension using the adjustment to avoid ribbon wrinkle and get the best print quality.
Loosen the ribbon tension screw to move the ribbon tension bar forward (Increasing tension) or backward (Decreasing tension) to adjust the ribbon tension level. For scuffing issues, try decreasing the ribbon tension. After adjustment, tighten the screw.

7.2.3 Ribbon Peeling Angle Adjustment

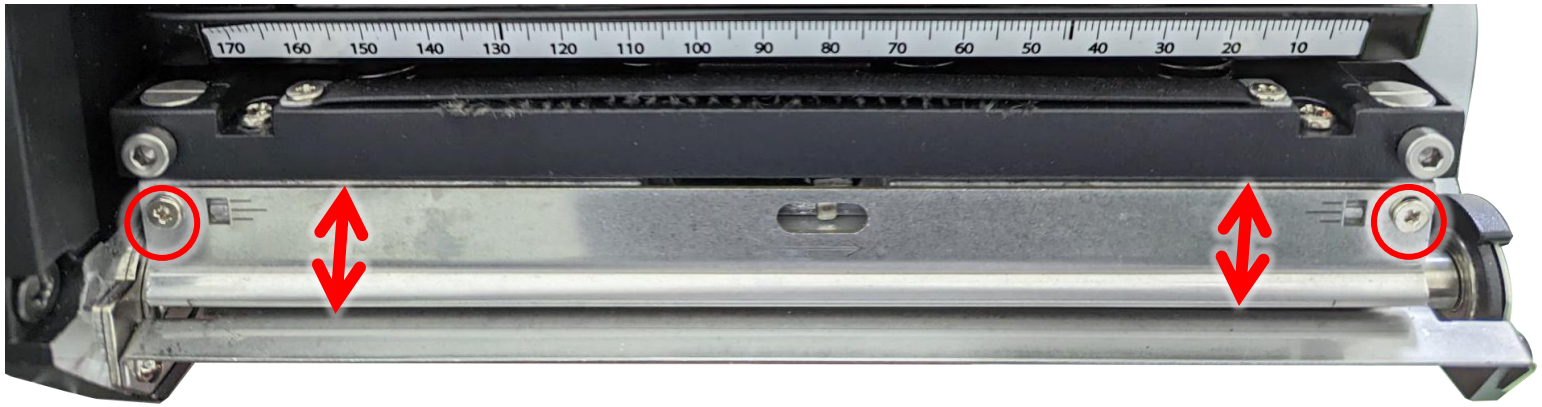

The **Ribbon Peeling Angle Adjustment** can adjust the ribbon peeling angle with media.
When the print quality is not good, the peeling angle can be changed to get the best print quality.
Loosen two ribbon peeling angle screws to move the ribbon peeling plate up (Increasing angle) or down (Decreasing angle) for adjusting the ribbon peeling angle.
In general, reducing the ribbon peeling angle could be increased the printing intensity. After adjustment, tighten the screws.

7.2.4 Tear Bar Angle Adjustment

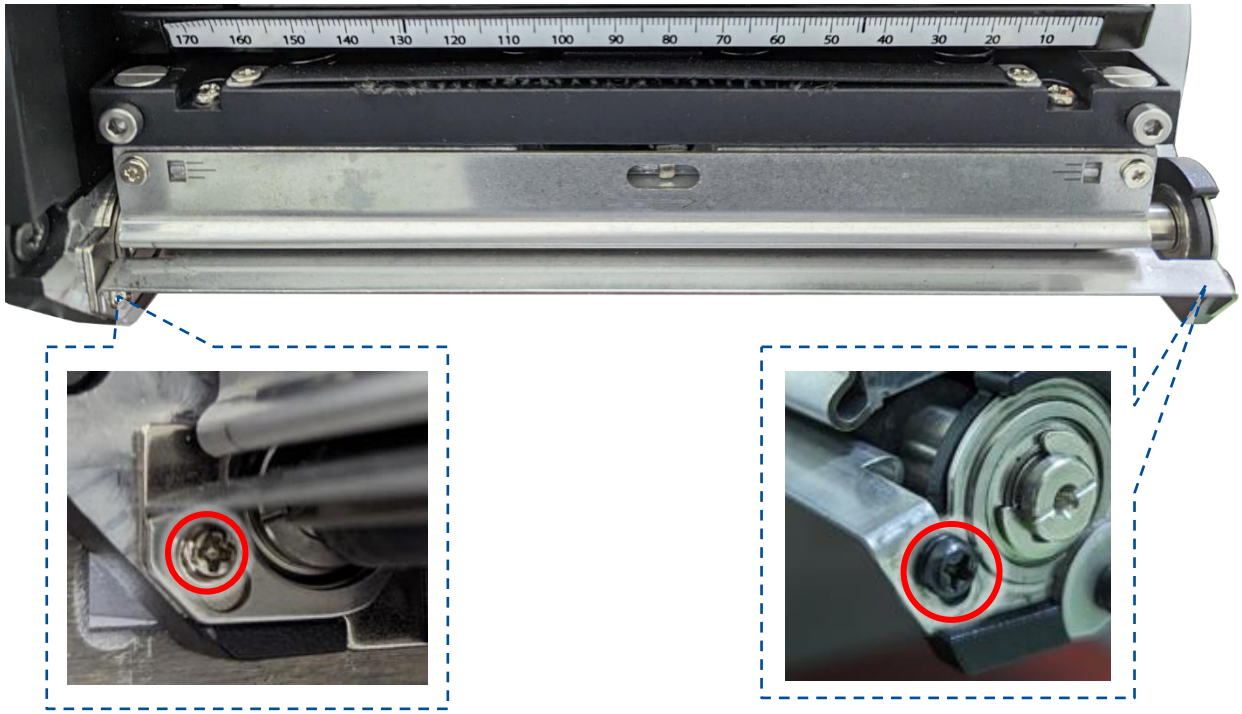

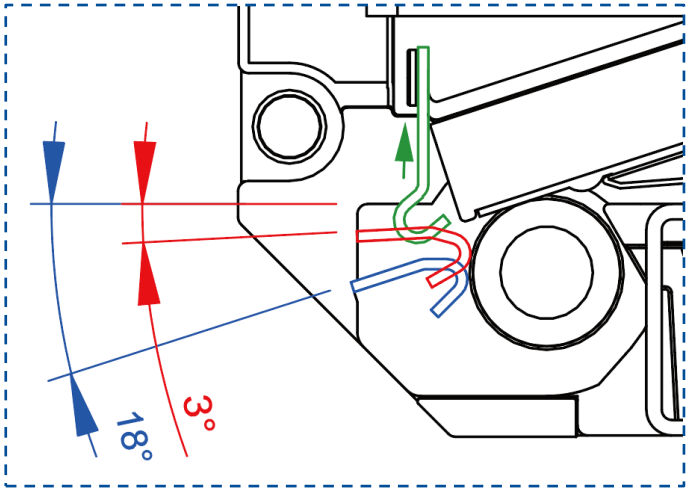

The media tearing angle can be adjusted -18 to -3 degree by moving the **Tear Bar**.

When you want to change the angle of the label exit in peel off mode or tear off mode, you can adjust the tear bar to get the best result.

Loosen two screws on tear bar to move the tear bar up for increasing paper tearing ability. After adjustment, tighten the screws.

Move the ribbon peeling plate (as shown in green) up if necessary.

7.3 RFID Errors Message

The RFID encoder can detect a number of errors. When one of these errors occurs, the RFID encoder alerts the printer to perform the currently selected error action and display the appropriate error message on the control panel's LCD.
You may refer to the TSPL/TSPL2 Programming Manual when configuring the RFID function for your printer. You can download this manual from TSC website: https://www.tscprinters.com.

Error Message	Possible Cause	Recovery Procedure
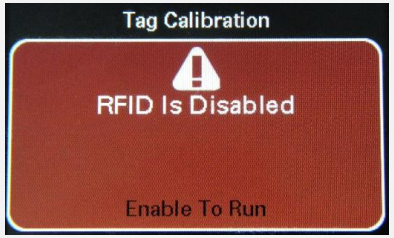	■ RFID is disabled.	■ Please go to RFID > Control > RFID Active to enable the RFID.
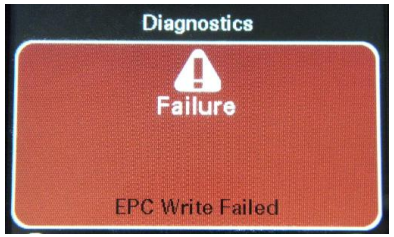	■ The EPC tag write failed via Diagnostics > Write EPC with 1s or Write EPC with 2s.	■ The label could be misaligned. Perform the Sensor > Auto Calibration procedure to ensure the label is at top-of-form. ■ Perform the FRID > Control > Tag Calibration > RFID Calibrate. ■ Make sure the media are smart labels with RFID tags located in the correct position. ■ The RFID tag could be defective. Try another tag. ■ Make sure the application does not send too few or too many digits to the RFID tag.
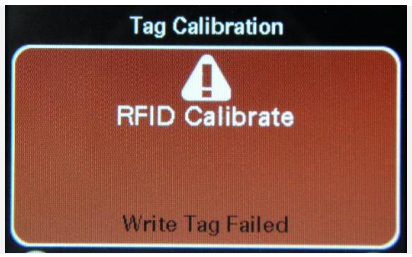	■ Tag calibration has failed.	■ The label could be misaligned. Perform the Sensor > Auto Calibration procedure to ensure the label is at top-of-form. ■ Make sure the media are smart labels with RFID tags located in the correct position. ■ The RFID tag could be defective. Try another tag.

	■ The RFID command is sent to the printer, but RFID is disabled.	■ Please go to RFID > Control > RFID Active to enable the RFID. ■ Then process RFID commands.
	■ When the "Non- RFID warning" option is "ON" (RFID > Control > Non- RFID Warning), the printer will display this warning message once the printer has obtained the non-RFID data.	■ N/A
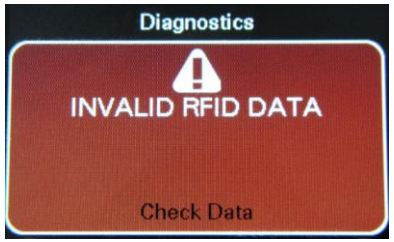	■ The tag data sent does not match the settings.	■ Please check the tag data of the RFID commands.
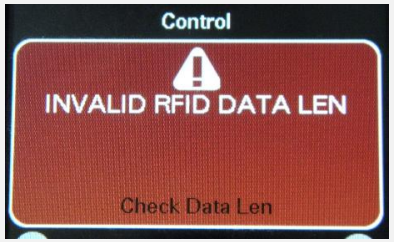	■ The tag length size (the size parameter of RFID command) sent does not match the setting.	■ Please check the data length size of the RFID commands.

	■ The tag cannot be written.	■ The label could be misaligned. Perform the Sensor > Auto Calibration procedure to ensure the label is at top-of-form. ■ Perform the FRID > Control > Tag Calibration > RFID Calibrate. ■ Make sure the media are smart labels with RFID tags located in the correct position. ■ The RFID tag could be defective. Try another tag. ■ Make sure the application does not send too few or too many digits to the RFID tag. ■ Check RFID commands are correct.
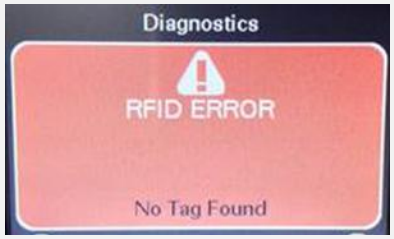	■ The tag cannot be read.	■ Make sure the media are smart labels with RFID tags located in the correct position. ■ The RFID tag could be defective. Try another tag.

8 Ribbon Saver Function (Optional)

Ribbon saver is a function that enables the printer to save ribbon consumption when processing print job. The ribbon saver function is only available when the ribbon saver kit is installed.

8.1 Ribbon Saver Operation

The drawing below illustrates the media/ribbon feed direction and the printhead position when the ribbon saver function is activated.

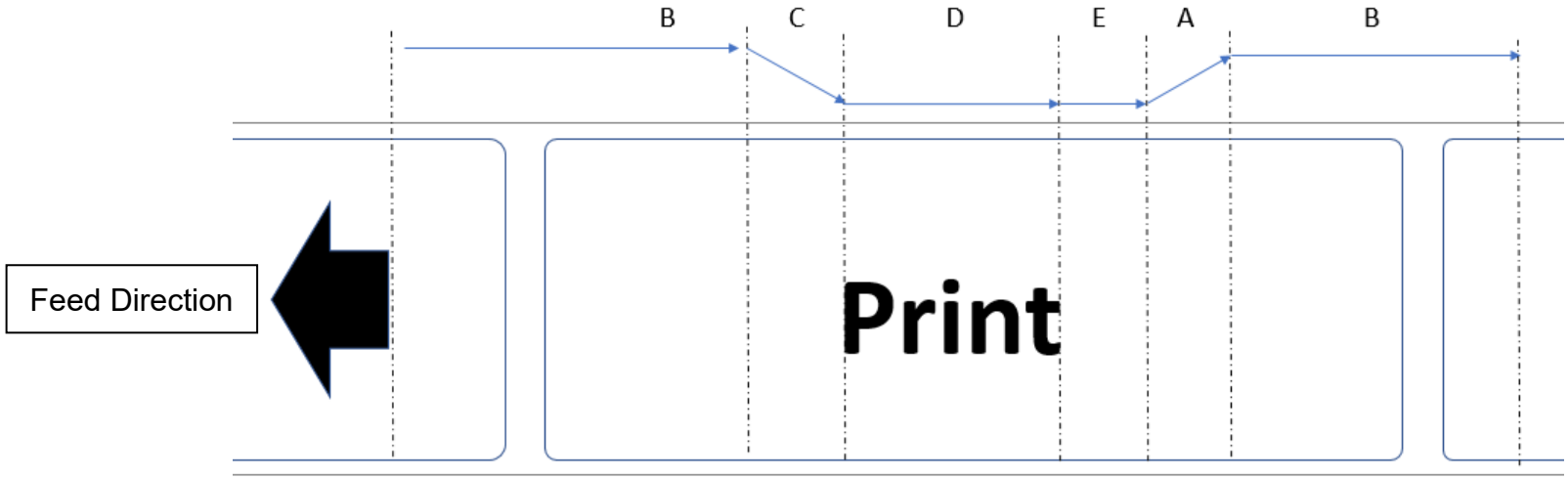

A: The printhead is ascending.
B: The printhead keeps up.
C: The printhead is descending.
D: The printhead keeps down and prints data on the label.
E: The printhead still keeps down. To optimize the print quality, the printhead cannot ascend immediately after the D phase.

- To enable the ribbon saver function, go to **Menu > Advanced > Ribbon Saver**, select **Enable**.
- The print accuracy is ±1.5 mm when the ribbon saver function is activated.
- Set the printer to **Applicator Mode** when using the ribbon saver function.

8.2 Calculation of Ribbon Consumption

Instance 1:

	6-inch Series		4-inch Series	
Print Speed (ips)	Minimum Distance (mm) (A)	Ribbon Consumption (mm) (B)	Minimum Distance (mm) (A)	Ribbon Consumption (mm) (B)
2	19	14	23	12
3	25	14	25	12
4	27	14	29	12
5	31	16	35	12
6	37	18	35	14
7	39	22	41	16
8	41	27	43	16
9	43	27	47	16
10	45	27	49	19
11	47	29	53	19
12	53	30	57	19
13	55	30	61	20
14	57	30	65	20
15	--	--	67	20
16	--	--	69	20

(A) indicates the distance required in order to support the configured print speed.

(B) indicates the ribbon consumption based on the configured print speed.

(A) minus (B) is equal to the saved ribbon.

Instance 2:

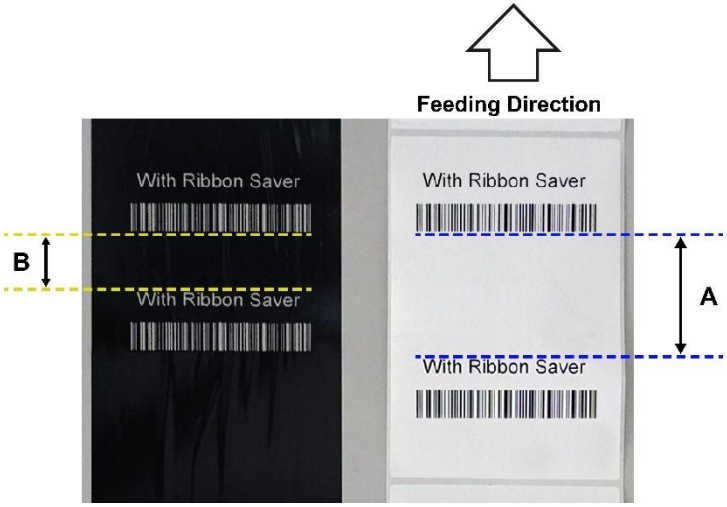

	6-inch Series		4-inch Series	
Print Speed (ips)	Minimum Distance (mm) (A)	Ribbon Consumption (mm) (B)	Minimum Distance (mm) (A)	Ribbon Consumption (mm) (B)
2	15	10	15	7
3	19	14	19	7
4	25	14	21	8
5	29	17	25	10
6	33	20	29	11
7	37	20	33	12
8	39	27	33	18
9	43	32	37	18
10	45	36	41	19
11	53	38	45	19
12	55	38	49	25
13	61	38	53	27
14	65	39	57	29
15	--	--	--	--
16	--	--	--	--

(A) indicates the distance required in order to support the configured print speed.

(B) indicates the ribbon consumption based on the configured print speed.

(A) minus (B) is equal to the saved ribbon.

Instance 3:

	6-inch Series		4-inch Series	
Print Speed (ips)	Minimum Distance (mm) (A)	Ribbon Consumption (mm) (B)	Minimum Distance (mm) (A)	Ribbon Consumption (mm) (B)
2	11	8	11	7
3	11	8	11	7
4	11	8	11	7
5	11	8	11	8
6	11	9	11	8
7	11	10	11	9
8	11	10	11	10
9	13	11	11	10
10	13	11	11	10
11	15	13	13	10
12	15	13	13	12
13	15	14	13	12
14	17	15	15	12
15	--	--	15	12
16	--	--	17	14

(A) indicates the distance required in order to support the configured print speed.

(B) indicates the ribbon consumption based on the configured print speed.

(A) minus (B) is equal to the saved ribbon.

8.3 Ribbon and Label Specification for Ribbon Saver Function

Item	Description
Ribbon Width	• 6-inch models: 60 mm or more. • 4-inch models: 40 mm or more.
Ribbon Length	Guaranteed operational speed: • Print distance should be equal or greater than 10 mm required for the ribbon saver function. The printer will calculate the length of the remaining ribbon when the print distance is greater than 140 mm. Knowing the length of the remaining ribbon helps the printer adjust the backfeed speed. • When installing a new ribbon roll, wind the ribbon on an empty rewinder paper core. Winding the ribbon on the used ribbon will affects the calculation and efficiency of the ribbon saver function. • To optimize the ribbon saver function, a preliminary test is strongly recommended to find the best combination of the ribbon type, operating environment, and your application.
Label Width	• 6-inch models: 50.8 mm or more. • 4-inch models: 25.4 mm or more.
Label Pitch*	• 6-inch models: 33 mm or more in the backfeed mode. • 4-inch models: 25.4 mm or more in the backfeed mode.

NOTE: Label pitch is the distance between the leading edge of two adjacent labels.

9 Maintenance

This session presents the clean tools and methods to maintain the printer.

- **For Cleaning**

  Depending on the media used, the printer may accumulate residues (media dust, adhesives, etc.) as a by-product of normal printing. To maintain the best printing quality, you should remove these residues by cleaning the printer periodically. Regularly clean the printhead and supply sensors once change a new media to keep the printer at the optimized performance and extend printer life.

- **For Disinfecting**

  Sanitize your printer to protect yourself and others and can help prevent the spread of viruses.

- **Important**
  - Set the printer power switch to O (Off) prior to performing any cleaning or disinfecting tasks. Leave the power cord connected to keep the printer grounded and to reduce the risk of electrostatic damage.
  - Do not wear rings or other metallic objects while cleaning any interior area of the printer.
  - Use only the cleaning agents recommended in this document. Use of other agents may damage the printer and void its warranty.
  - Do not spray or drip liquid cleaning solutions directly into the printer. Apply the solution on a clean lint-free cloth and then apply the dampened cloth to the printer.
  - Do not use canned air in the interior of the printer as it can blow dust and debris onto sensors and other critical components.
  - Only use a vacuum cleaner with a nozzle and hose that are conductive and grounded to drain off static build up.
  - All reference in these procedures for use of isopropyl alcohol requires that a 99% or greater isopropyl alcohol content be used to reduce the risk of moisture corrosion to the printhead.
  - Do not touch printhead by hand. If you touch it careless, please use 99% Isopropyl alcohol to clean it.
  - Always taking personal precaution when using any cleaning agent.

Cleaning Tools

- Cotton swab
- Lint-free cloth
- Brush with soft non-metallic bristles
- Vacuum cleaner
- 75% Ethanol (for disinfecting)
- 99% Isopropyl alcohol (for printhead and platen roller cleaning)
- Genuine printhead cleaning pen
- Mild detergent (without chlorine)

Cleaning Process:

Printer Part	Method	Interval
Printhead	I. Always turn off the printer before cleaning the printhead. II. Allow the printhead to cool for at least one minute. III. Use a cotton swab and 99% Isopropyl Alcohol or genuine printhead cleaning pen to clean the printhead surface.	Clean the printhead when changing a new label roll.
Platen Roller	I. Turn off the printer. II. Rotate the platen roller and wipe it thoroughly with the lint-free 99% Isopropyl Alcohol.	Clean the platen roller when changing a new label roll
Peel Bar	Use the lint-free cloth with 99% Isopropyl Alcohol to wipe it.	As needed
Sensor	Use brush with soft non-metallic bristles or a vacuum cleaner, to remove paper dust. Clean upper and lower media sensors to ensure reliable Top of Form and Paper Out sensing.	Monthly
Exterior	Clean the exterior surfaces with a clean, lint-free cloth (water-dampened cloth). If necessary, use a mild detergent or desktop cleaning solution then use the 75% Ethanol to wipe it.	As needed
Interior	Clean the interior of the printer by removing any dirt and lint with a vacuum cleaner, as described above, or use a brush with soft non-metallic bristles then use the 75% Ethanol to wipe it.	As needed

10 Agency Compliance and Approvals

EN 55032: Class A
EN 55024
EN 55035
EN 61000
EN 60950-1
EN 62368-1
This is a class A product. In a domestic environment this product may cause radio interference in which case the user may be required to take adequate measures.

FCC part 15B, Class A
ICES-003, Class A

This equipment has been tested and found to comply with the limits for a Class A digital device, pursuant to Part 15 of the FCC Rules. These limits are designed to provide reasonable protection against harmful interference when the equipment is operated in a commercial environment.

This equipment generates, uses, and can radiate radio frequency energy and, if not installed and used in accordance with the manufacturer's instruction manual, may cause harmful interference with radio communications. Operation of this equipment in a residential area is likely to cause harmful interference, in which case you will be required to correct the interference at your own expense.

This Class A digital apparatus complies with Canadian ICES-003.
Cet appareil numérique de la classe A est conform à la norme NMB-003 du Canada.

This device complies with Part 15 of the FCC Rules. Operation is subject to the following two conditions: (1) This device may cause harmful interference, and (2) this device must accept any interference received, including interference that may cause undesired operation.

AS/NZS CISPR 32, Class A

	UL 62368-1 CAN/CSA-C22.2 NO. 62368-1
	KS C 9832 KS C 9835 KC62368-1 이 기기는 업무용(A 급) 전자파적합기기로서 판매자 또는 사용자는 이 점을 주의하시기 바라며, 가정외의 지역에서 사용하는 것을 목적으로 합니다.
	GB 17625.1-2022; GB 4943.1-2022; GB/T 9254.1-2021（classA） 警告：在居住环境中，运行此设备可能会造成无线电干扰。
	Energy Star for Imaging Equipment Version 3.0
	TP TC 004 TP TC 020
	CNS15598-1 CNS15936 CNS 15663
	IS 13252(Part 1)/ IEC 60950-1

Note: There may have certification differences in the series models, please refer to product label for accuracy.

Important safety instructions:

1. Read all of these instructions and keep them for later use.
2. Follow all warnings and instructions on the product.
3. Disconnect the power from the AC inlet before cleaning or if fault happened. Do not use liquid or aerosol cleaners. Using a damp cloth is suitable for cleaning.

4. The mains socket shall be installed near the equipment and easily accessible.
5. The unit must be protected against moisture.
6. Ensure the stability when installing the device, Tipping or dropping could cause damage.
7. Make sure to follow the correct power rating and power type indicated on marking label provided by manufacture.
8. Please refer to user manual for maximum operation ambient temperature.

Informations de sécurité importantes :

1. Lire attentivement et conserver ces instructions pour un usage ultérieur.
2. Bien respecter les avertissements et instructions sur le produit.
3. Débrancher l'alimentation de l’entrée CA avant de procéder au nettoyage ou en cas de dysfonctionnement. Ne pas utiliser de nettoyant liquide ou d'aérosol. Nettoyer simplement à l'aide d'un chiffon humide.
4. La prise électrique doit être installée à proximité de l'appareil et être facilement accessible.
5. L'appareil doit être protégé de l’humidité.
6. Assurez-vous que l’unité est installée de manière stable pour un usage et une manipulation sans risque de chute.
7. Respecter le type d'alimentation et la puissance nominale indiqués par le fabricant.
8. Se reporter au mode d'emploi pour vérifier les températures maximum d’utilisation recommandées.

WARNING:

Moving parts. Keep finger or body away from moving parts.

IMPORTANT :

Pièces mobiles. Maintenir vos doigts et votre corps à l’écart des pièces mobiles.

CAUTION:

(For equipment with RTC (CR2032) battery or rechargeable battery pack)

Risk of explosion if battery is replaced by an incorrect type.

Dispose of used batteries according to the Instructions as below.

1. DO NOT throw the battery in fire.
2. DO NOT short circuit the contacts.
3. DO NOT disassemble the battery.
4. DO NOT throw the battery in municipal waste.
5. The symbol of the crossed out wheeled bin indicates that the battery should not be placed in municipal waste.

ATTENTION :

(Pour les appareils équipés d'une batterie RTC (CR2032) ou de batteries rechargeables)

Risque d'explosion en cas de remplacement de la batterie par une référence non conforme.

La batterie usagée :

1. NE DOIT PAS être mise au feu.
2. NE DOIT PAS être mise en court-circuit.
3. NE DOIT PAS être ouverte ou démontée.
4. NE DOIT PAS être jetée avec les ordures ménagères.
5. L'icône de poubelle barrée indique que la batterie ne doit pas être jetée avec les ordures ménagères.

Caution: Hot surface for printhead.

Do not touch the printhead before it cooling.

ATTENTION : Surface de la tête d'impression chaude.

Ne pas toucher la tête d'impression avant qu'elle ait refroidi.

WARNING:

Remove the power from AC inlet before opening the media cover for cleaning or repairing faults. After cleaning or fixing faults, media cover closing before power connecting to AC inlet.

IMPORTANT :

Retirer l’alimentation de l’entrée CA avant d’ouvrir le capot des consommables pour procéder au nettoyage ou à la réparation de l'appareil.. Après avoir effectué le nettoyage ou corrigé les dysfonctionnements, fermez le capot des consommables avant de brancher l’alimentation à l’entrée CA.

CAUTION:

Any changes or modifications not expressly approved by the grantee of this device could void the user's authority to operate the equipment.

CE Statement:

This equipment complies with EU radiation exposure limits set forth for an uncontrolled environment. This equipment should be installed and operated with minimum distance 20 cm between the radiator & your body.

All operational modes:
2.4GHz: 802.11b, 802.11g, 802.11n (HT20), 802.11n (HT40)
5GHz: 802.11a,

The frequency, mode and the maximum transmitted power in EU are listed below:
2400 MHz – 2483.5 MHz: 19.88 dBm (EIRP)
5150 MHz – 5250 MHz: 17.51 dBm (EIRP)

5150-5350MHz for Only indoor use
5470-5725MHz for indoor/outdoor use

Restrictions In AZE

National restrictions information is provided below

Frequency Band	Country	Remark

5150-5350MHz	**Azerbaijan**	**No license needed if used indoor and power not exceeding 30mW**
5470-5725MHz		

Hereby, TSC Auto ID Technology Co., Ltd. declares that the radio equipment type [Wi-Fi] IEEE 802.11 a/b/g/n is in compliance with Directive 2014/53/EU
The full text of the EU declaration of conformity is available at the following internet address: http:// www.tscprinters.com

RF exposure warning (Wi-Fi)
This equipment must be installed and operated in accordance with provided instructions and must not be co-located or operating in conjunction with any other antenna or transmitter. End-users and installers must be providing with antenna installation instructions and transmitter operating conditions for satisfying RF exposure compliance.

SAR Value: 0.736 W/公斤

RF exposure warning (For Bluetooth)
The equipment complies with FCC RF exposure limits set forth for an uncontrolled environment.
The equipment must not be co-located or operating in conjunction with any other antenna or transmitter.

Canada, Industry Canada (IC) Notices

This Class B digital apparatus complies with Canadian ICES-003 and RSS-210.

Operation is subject to the following two conditions: (1) this device may not cause interference, and (2) this device must accept any interference, including interference that may cause undesired operation of the device.

Radio Frequency (RF) Exposure Information

The radiated output power of the Wireless Device is below the Industry Canada (IC) radio frequency exposure limits. The Wireless Device should be used in such a manner such that the potential for human contact during normal operation is minimized.

This device has been evaluated for and shown compliant with the IC Specific Absorption Rate (“SAR”) limits when installed in

specific host products operated in portable exposure conditions. **(For Wi-Fi)**

This device has also been evaluated and shown compliant with the IC RF Exposure limits under portable exposure conditions. (Antennas are less than 20 cm of a person's body). **(For Bluetooth)**

Canada, avis de l'Industry Canada (IC)

Cet appareil numérique de classe B est conforme aux normes canadiennes ICES-003 et RSS-210.
Son fonctionnement est soumis aux deux conditions suivantes : (1) cet appareil ne doit pas causer d'interférence et (2) cet appareil doit accepter toute interférence, nota 毫米 ent les interférences qui peuvent affecter son fonctionnement.

Informations concernant l'exposition aux fréquences radio (RF)

La puissance de sortie émise par l'appareil sans fil est inférieure à la limite d'exposition aux fréquences radio de l'Industry Canada (IC). Utilisez l'appareil sans fil de façon à minimiser les contacts humains lors du fonctionnement normal.

Ce périphérique a été évalué et démontré conforme aux limites SAR (Specific Absorption Rate – Taux d'absorption spécifique) par l'IC lorsqu'il est connecté à des dispositifs hôtes spécifiques opérant dans des conditions d'utilisation mobile. **(Pour le Wi-Fi)**

Ce périphérique a également été évalué et démontré conforme aux limites d'exposition radio-fréquence par l'IC pour des utilisations par des opérateurs mobiles (les antennes sont à moins de 20 cm du corps d'une personne). **(Pour le Bluetooth)**

NCC 警語:

經型式認證合格之低功率射頻電機，非經許可，公司、商號或使用者均不得擅自變更頻率、加大功率或變更原設計之特性及功能。(即低功率電波輻射性電機管理辦法第十二條)
低功率射頻電機之使用不得影響飛航安全及干擾合法通信；經發現有干擾現象時，應立即停用，並改善至無干擾時方得繼續使用。
前項合法通信，指依電信法規定作業之無線電通信。低功率射頻電機須忍受合法通信或工業、科學及醫療用電波輻射性電機設備之干擾。(即低功率電波輻射性電機管理辦法第十四條)

限用物質含有情況標示聲明書/ Declaration of the Presence Condition of the Restricted Substances Marking

設備名稱：熱轉式/熱感式條碼印表機 / Barcode Printer　主型號： PEX-2000-6　系列型號

Equipment name　　Type designation (Type)

單元Unit	限用物質及其化學符號 Restricted substances and its chemical symbols					
	鉛Lead (Pb)	汞Mercury (Hg)	鎘Cadmium (Cd)	六價鉻 Hexavalent chromium (Cr^{+6})	多溴聯苯 Polybrominated biphenyls (PBB)	多溴二苯醚 Polybrominated diphenyl ethers (PBDE)
內外塑膠件	○	○	○	○	○	○
內外鐵件	-	○	○	○	○	○
滾輪	○	○	○	○	○	○
電路板	-	○	○	○	○	○
晶片電阻	-	○	○	○	○	○
積層陶瓷表面黏著電容	○	○	○	○	○	○
集成電路-IC	-	○	○	○	○	○
電源供應器	○	○	○	○	○	○
印字頭	-	○	○	○	○	○
插座	-	○	○	○	○	○
線材	-	○	○	○	○	○

備考1.〝超出0.1 wt %〞及〝超出0.01 wt %〞係指限用物質之百分比含量超出百分比含量基準值。

Note 1：“Exceeding 0.1 wt %” and “exceeding 0.01 wt %” indicate that the percentage content of the restricted substance exceeds the reference percentage value of presence condition.

備考2.〝○〞係指該項限用物質之百分比含量未超出百分比含量基準值。

Note 2：“○” indicates that the percentage content of the restricted substance does not exceed the percentage of reference value of presence.

備考3.〝－〞係指該項限用物質為排除項目。

Note 3：The “–” indicates that the restricted substance corresponds to the exemption.

Revision History

Date	Content	Editor
2023/01/06	First Release for the 6-inch models.	Camille Pao
2023/05/09	• Added 4-inch models' specifications into the "Product Specification" section from page 4 to 7. • Added "MFi Bluetooth 5.0" into the "Product Specification" section on page 7. • Added "Ribbon Saver mode" on page 6 and 7. • Added the "Loading Media in Ribbon Saver Mode" section on page 29 and 30. • Added "Display Orientation" and "Ribbon Saver" in the "Advanced" section on page 81 and 82.	Peter Yao
2023/05/22	Added the Ribbon Saver message screen on page 30.	Peter Yao
2023/08/24	Added the Ribbon Saver Function (Optional) section from page 123 to 128.	Peter Yao
2023/12/01	• Modified the default setting for the print speed function, page 54. • Removed Chapter 7 RFID Setting Commands. You may refer to the TSPL/TSPL2 Programming Manual when configuring the RFID function for your printer. You can download the manual from TSC website: https://www.tscprinters.com.	Peter Yao
2025/07/08	• Added liability statements, page I to II. • Added "rMQR code" to the supported 2D barcode types.	Peter Yao
2025/07/30	Updated CCC information.	Peter Yao
2025/10/30	Updated the Media Pull-in/pull out force info. on "Product Specification" section	Camille Pao
2025/11/05	• Added RED information to the "TSC Console" chapter. • Added RED information to the "Advanced" section.	Peter Yao

2026/7/16	• Update the TSC Console Utility section • Add a note to “Advanced” section for Ribbon Tension	Camille Pao

www.tscprinters.com